ALLIED MACHINE & ENGINEERING

Holemaking Solutions for Today's Manufacturing

Boring

Reaming

Burnishing

Threading

HP and Universal

DRILLING

Replaceable Insert Drilling System

Specials

SECTION

A40

High Performance / Universal

High Performance and Universal

Replaceable Spade Drill Insert Drilling System

- **Diameter Range:** 0.9688" - 8.5000"

Since the Beginning

The Universal spade drill is the original design that launched Allied Machine into the holemaking industry. After the T-A® was introduced, customers who already owned the Universal style holders wanted the same benefits offered by the T-A without having to invest in an entirely new system.

The High Performance (HP) insert was created to provide similar performance as the T-A. The HP insert (along with an adapter for larger sizes) fits into existing Universal style holders.

When the customers speak, we listen.

Applicable Industries

Aerospace | Agriculture | Automotive | Energy | Firearms | General Machining | Oil & Gas

Your safety and the safety of others is very important. This catalog contains important safety messages. Always read and follow all safety precautions.

This triangle is a safety hazard symbol. It alerts you to potential safety hazards that can cause tool failure and serious injury.

When you see this symbol in the catalog, look for a related safety message that may be near this triangle or referred to in the nearby text.

There are safety signal words also used in the catalog. Safety messages follow these words.

WARNING

WARNING (shown above) means that failure to follow the precautions in this message could result in tool failure and serious injury.

NOTICE means that failure to follow the precautions in this message could result in damage to the tool or machine but not result in personal injury.

NOTE and **IMPORTANT** are also used. These are important that you read and follow but are not safety-related.

Visit www.alliedmachine.com for the most up-to-date information and procedures.

Reference Icons
The following icons will appear throughout the catalog to help you navigate between products.

High Performance / Universal Inserts
Refers to the range of inserts that connect with the corresponding holders

Universal Insert Coating Options
Details and overview of the different coatings available for Universal spade drill inserts

Insert Adapter Information
Detailed information regarding the corresponding adapter item

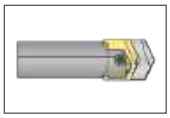

High Performance / Universal Holders
Refers to the range of holders that connect with the corresponding inserts

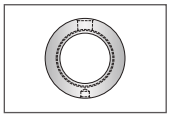

Rotary Coolant Adapter (RCA) Information
Detailed instructions and information regarding the corresponding RCA part

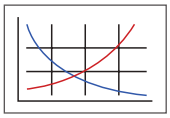

Recommended Cutting Data
Speed and feed recommendations for optimum and safe drilling

Series	Diameter Range - Imperial (in)
A	0.9688 - 1.2500
B	1.2500 - 1.7500
C	1.5000 - 2.3750
D	2.0000 - 2.8750
E	2.5000 - 3.3750
F	3.0000 - 3.8750
G	3.5000 - 4.5000
H^1 - H^2	4.0000 - 5.0000
H^3 - H^9	5.1250 - 8.5000

High Performance / Universal Drilling System Contents

Introduction Information

System Overview . . . . . 2 - 3
Product Nomenclature . . . . . 4 - 5

Drill Series

A Series . . . . . 6 - 7
B Series . . . . . 8 - 9
C Series . . . . . 10 - 13
D Series . . . . . 14 - 15
E Series . . . . . 16 - 17
F Series . . . . . 18 - 19
G Series . . . . . 20 - 21
H Series . . . . . 22 - 24

Accessories

Adapters 25
Blade-Loc Screws & Pipe Plugs 26
Rotary Coolant Adapters (RCA) 27

Recommended Cutting Data

Regrind Charts . . . . . 28 - 29
High Performance Inserts . . . . . 30 - 31
Universal Inserts . . . . . 32 - 33
Deep Hole Drilling Guidelines 34

System Overview | Inserts

High Performance Inserts

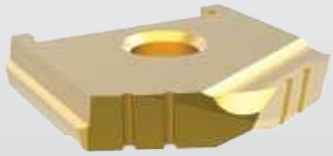

A - C Series

High Performance Inserts

- Increase production 100 - 500% compared to uncoated Universal spade drill inserts.
- Fit into Universal style holders.
- Available in TiN and TiAlN coatings.
- Single-piece design (A - C series) eliminates the need for adapters, which maximizes tool performance in these smaller sizes.

Universal Inserts

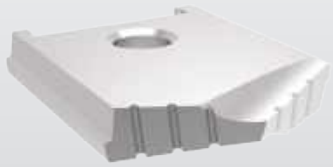

130° CPM-M4

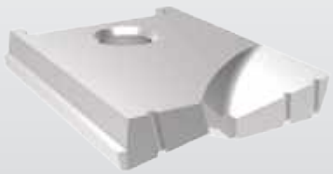

Flat Bottom

90° Spot and Chamfer

Universal Inserts

- Standard inserts stocked uncoated.
- Also available in TiN, TiAlN, and TiCN coatings, which improve tool life when compared to uncoated inserts.

TiN Coating	
Ordering Code: T	Example: 10224-0116**T**

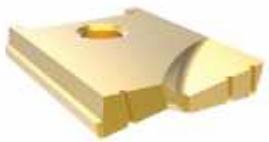

TiAlN Coating	
Ordering Code: A	Example: 10224-0116**A**

TiCN Coating	
Ordering Code: N	Example: 10224-0116**N**

System Overview | Holders

Straight Shank Holders

- Stub (#125)
- Short (#150)
- Short (#100)
- Standard (#200)
- Long (#250)

Taper Shank Holders

- Short (#300)
- Short (#300 TSC)
- Short (#400 SR)
- Standard (#500 SR)
- Long (#600 SR)
- XL (#700 SR)

Adapter
for High Performance D - H series inserts only.

*For detailed information and setup for adapters and Blade-Loc screw assembly, see page A40: 25 - 26.

Product Nomenclature

High Performance Spade Drill Inserts

1	02	8	T	–	0406
1	2	3	4		5

1. Spade Drill Insert	2. Material	3. Series	4. Coating	5. Diameter (by 1/32")
1 = Spade drill insert	**02** = High-speed steel	**1** = A series **2** = B series **3** = C series	**T** = TiN **A** = TiAlN **N** = TiCN	**0406** = Inch **4.3593** = Decimal

Universal Spade Drill Inserts

1	02	8	4	–	0406	T
1	2	3	4		5	6

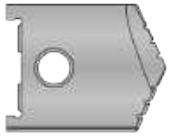

1. Spade Drill Insert	2. Insert Style	3. Series	4. Material
1 = Spade drill insert	**02** = 130° Spade **04** = Flat Bottom **12** = 90° Spot and Chamfer	**4** = D series **5** = E series **6** = F series **7** = G series **8** = H1 - H2 series **9** = H3 - H9 series	**4** = High-speed steel (SPM-M4 HSS)

5. Diameter (by 1/32”)	6. Coating
0406 = Inch **4.3593** = Decimal	**Blank** = Uncoated **T** = TiN **A** = TiAlN **N** = TiCN

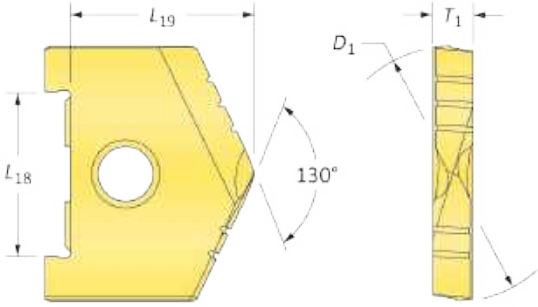

Reference Key

Symbol	Attribute
D_1	Insert diameter
L_{18}	Holder locating area
L_{19}	Reference length
T_1	Thickness

Product Nomenclature

High Performance / Universal Spade Drill Insert Holders

2	22	8	1	–	0006
1	2	3	4		5

1. Holder
2 = Drill holder

2. Classification	
Straight Shank	**Taper Shank**
02 = Stub #125 (NC)	**14** = Short #300 (NC)
04 = Short #150 (NC)	**15** = Short #300 (TSC)
06 = Short #100 (C)	**16** = Short #400 SR (RCA)
08 = Standard #200 (C)	**18** = Standard #500 SR (RCA)
10 = Long #250 (C)	**20** = Long #600 SR (RCA)
	22 = XL #700 SR SR (RCA)

C = Coolant | NC = No Coolant | TSC = Through Shank Coolant | RCA = Rotary Coolant Adapter

3. Series
1 = A series
2 = B series
3 = C series
4 = D series
5 = E series
6 = F series
7 = G series
8 = H series

4. Holder Style
1 = Universal

5. Shank Size and Configuration	
Straight Shank	**Taper Shank**
0750 = 0.750" Straight Shank	**0002** = #2 Morse Taper Shank
1000 = 1.000" Straight Shank	**0003** = #3 Morse Taper Shank
1250 = 1.250" Straight Shank	**0004** = #4 Morse Taper Shank
1500 = 1.500" Straight Shank	**0005** = #5 Morse Taper Shank
2000 = 2.000" Straight Shank	**0006** = #6 Morse Taper Shank
3000 = 3.000" Straight Shank	

Reference Key

Symbol	Attribute
D_1	Insert diameter
D_2	Shank diameter
L_1	Overall length
L_{3HP}	Reference length (High Performance)
L_{3U}	Reference length (Universal)
L_4	Flute length
L_7	Shank length
P_1	Pipe tap

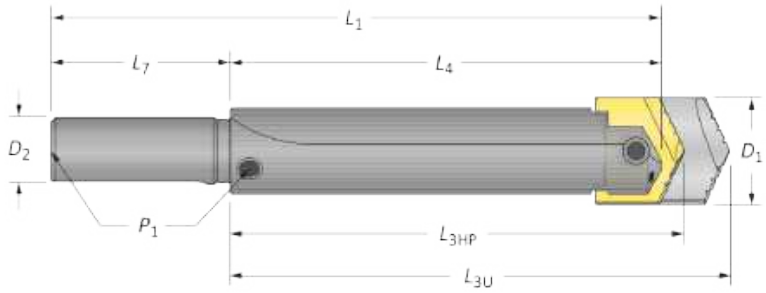

High Performance and Universal Spade Drill Inserts

A Series | Diameter Range: 0.9688" - 1.3750"

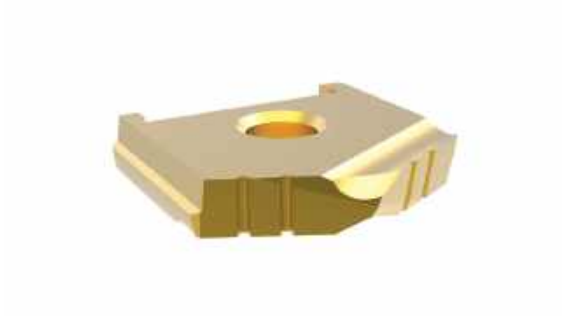

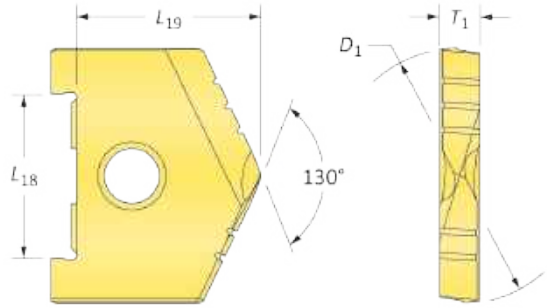

High Performance Spade Drill Inserts

Series	D_1 inch Fraction	D_1 inch Decimal	Inserts L_{18}	Inserts L_{19}	Inserts T_1	TiN Part No.	TiAlN Part No.	TiCN Part No.
A	31/32	0.9688	3/4	7/8	3/16	**1021T-0031**	**1021A-0031**	**1021N-0031**
	1	1.0000	3/4	7/8	3/16	**1021T-0100**	**1021A-0100**	**1021N-0100**
	1-1/32	1.0313	3/4	7/8	3/16	**1021T-0101**	**1021A-0101**	**1021N-0101**
	1-1/16	1.0625	3/4	7/8	3/16	**1021T-0102**	**1021A-0102**	**1021N-0102**
	1-3/32	1.0938	3/4	7/8	3/16	**1021T-0103**	**1021A-0103**	**1021N-0103**
	1-1/8	1.1250	3/4	7/8	3/16	**1021T-0104**	**1021A-0104**	**1021N-0104**
	1-5/32	1.1563	3/4	7/8	3/16	**1021T-0105**	**1021A-0105**	**1021N-0105**
	1-3/16	1.1875	3/4	7/8	3/16	**1021T-0106**	**1021A-0106**	**1021N-0106**
	1-7/32	1.2188	3/4	7/8	3/16	**1021T-0107**	**1021A-0107**	**1021N-0107**
	1-1/4	1.2500	3/4	7/8	3/16	**1021T-0108**	**1021A-0108**	**1021N-0108**
A Oversize	1-9/32	1.2813	3/4	7/8	3/16	**1021T-0109**	**1021A-0109**	**1021N-0109**
	1-5/16	1.3125	3/4	7/8	3/16	**1021T-0110**	**1021A-0110**	**1021N-0110**
	1-11/32	1.3438	3/4	7/8	3/16	**1021T-0111**	**1021A-0111**	**1021N-0111**
	1-3/8	1.3750	3/4	7/8	3/16	**1021T-0112**	**1021A-0112**	**1021N-0112**

Inserts sold in multiples of 1.

Flat Bottom

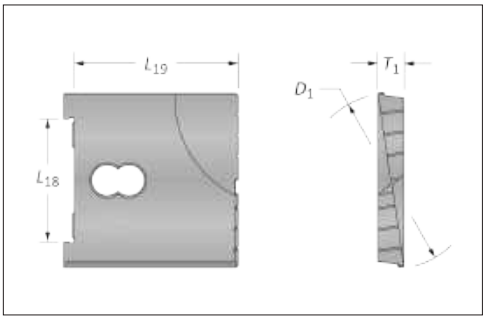

90° Spot & Chamfer

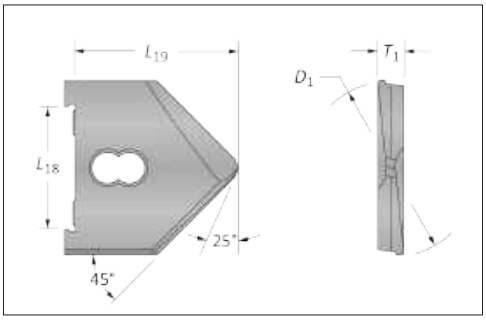

Universal Spade Drill Inserts

Series	D_1 inch Fraction	D_1 inch Decimal	Inserts L_{18}	Inserts L_{19}	Inserts T_1	Flat Bottom	90° Spot & Chamfer
A	1	1.0000	3/4	1-5/32	3/16	**10414-0100**	—
	1-1/16	1.0625	3/4	1-5/32	3/16	**10414-0102**	—
	1-1/8	1.1250	3/4	1-5/32	3/16	**10414-0104**	—
	1-3/16	1.1875	3/4	1-5/32	3/16	**10414-0106**	—
	1-1/4	1.2500	3/4	1-5/32	3/16	**10414-0108**	**11214-0108**

Inserts sold in multiples of 1.

A40: 30 - 33

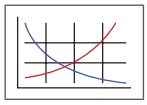

Key on A40: 1

A40: 7

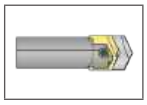

Sizes not shown are available upon request.
When ordering, please follow the example below:

Inch:	1-3/64", High Performance (A series), TiN = use Part No. **1021T-1.0469**
Decimal:	1.2125", High Performance (A series), TiN = use Part No. **1021T-1.2125**

High Performance / Universal Spade Drill Insert Holders

A Series

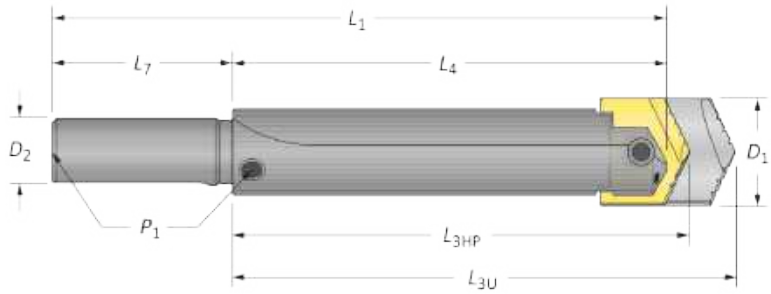

Straight Shank

	Length	D_1	Holder L_{3HP}	L_{3U}	L_4	L_1	Shank D_2	L_7	P_1	Style	Part No.
	Short	0.9688 - 1.3750	3.250	3.531	3.000	6.500	3/4	3.500	—	#150	**20411-0750**
	Short	0.9688 - 1.3750	3.250	3.531	3.000	6.500	1	3.500	—	#150	**20411-1000**
	Short	0.9688 - 1.3750	3.250	3.531	3.000	6.500	1	3.500	1/8 NPT	#100	**20611-1000**
	Short	0.9688 - 1.3750	3.250	3.531	3.000	6.500	1-1/2	3.500	1/8 NPT	#100	**20611-1500**
	Standard	0.9688 - 1.3750	8.000	8.281	7.750	11.250	3/4	3.500	1/8 NPT	#200	**20811-0750**
	Standard	0.9688 - 1.3750	8.000	8.281	7.750	11.250	1	3.500	1/8 NPT	#200	**20811-1000**
	Standard	0.9688 - 1.3750	8.000	8.281	7.750	11.250	1-1/2	3.500	1/8 NPT	#200	**20811-1500**
	Long	0.9688 - 1.3750	15.250	15.531	15.000	18.500	1	3.500	1/8 NPT	#250	⚠ **21011-1000**

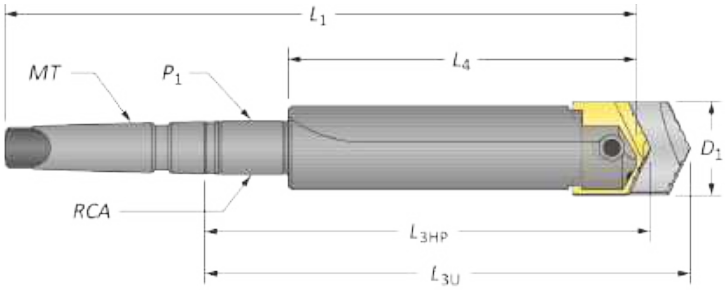

Taper Shank

	Length	D_1	Holder L_{3HP}	L_{3U}	L_4	L_1	Shank MT	P_1	RCA	Style	Part No.
	Short	0.9688 - 1.3750	3.437	3.719	3.000	6.875	#3 MT	—	—	#300	**21411-0003**
	Short	0.9688 - 1.3750	3.500	3.719	3.000	7.875	#4 MT	—	—	#300	**21411-0004**
	Short	0.9688 - 1.3750	3.437	3.719	3.000	6.875	#3 MT	—	—	#300 TSC	**21511-0003***
	Short	0.9688 - 1.3750	5.188	5.469	3.000	9.563	#4 MT	1/4 NPT	2T-4SR	#400 SR	**21611-0004**
	Standard	0.9688 - 1.3750	9.938	10.219	7.750	14.313	#4 MT	1/4 NPT	2T-4SR	#500 SR	**21811-0004**
	Long	0.9688 - 1.3750	17.188	17.469	15.000	21.563	#4 MT	1/4 NPT	2T-4SR	#600 SR	⚠ **22011-0004**
	XL	0.9688 - 1.3750	23.188	23.469	21.000	27.563	#4 MT	1/4 NPT	2T-4SR	#700 SR	⚠ **22211-0004**

*Through shank coolant, coolant inlet diameter = 1/4".

Rotary Coolant Adapter (RCA) and Accessories

	ID	OD	L_1	Driving Rod Thread	P_1	Part No.*	RCA O-Rings Kit Part No.**	Replacements
	1.250	2.500	1.375	3/8" - 16	1/4 NPT	⚠ **2T-4SR**	2T1-4SR	2T1-4OR-10

*RCA comes complete with (1) RCA, (2) O-rings, (2) snap rings, and (2) thrust washers.
**RCA Repair Kit includes (2) O-rings, (2) snap rings, and (2) thrust washers.
⚠ Refer to page A40: 27 for proper RCA assembly and safety information.

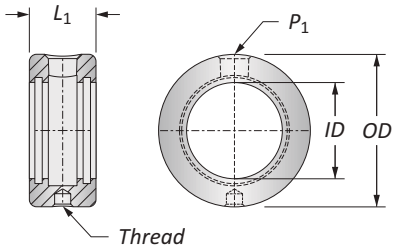

Connection Accessories

Clamping Screw Part No.	Clamping Screw Key	Blade-Loc Screw Part No.	Blade-Loc Screw Key	Pipe Plug Straight Shank Part No.	Pipe Plug Straight Shank Key	Pipe Plug MT Shank (with RCA) Part No.	Pipe Plug MT Shank (with RCA) Key
772074-1	5/64"	—	—	**710004-1**	5/32"	**710006-1**	7/32"

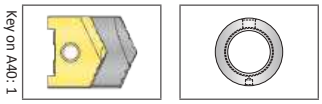

ⓘ = Imperial (in)
ⓜ = Metric (mm)
O-rings sold in packs of 10.

⚠ **WARNING** Refer to Speed and Feed charts for recommended adjustments to speeds and feeds. Refer to page A40: 34 for deep hole drilling guidelines in this section of the catalog. Visit **www.alliedmachine.com/DeepHoleGuidelines** for the most up-to-date information and procedures. Factory technical assistance is available for your specific applications through our Application Engineering Team.

A DRILLING
B BORING
C REAMING
D BURNISHING
E THREADING
X SPECIALS

High Performance and Universal Spade Drill Inserts

B Series | Diameter Range: 1.2500" - 1.7500"

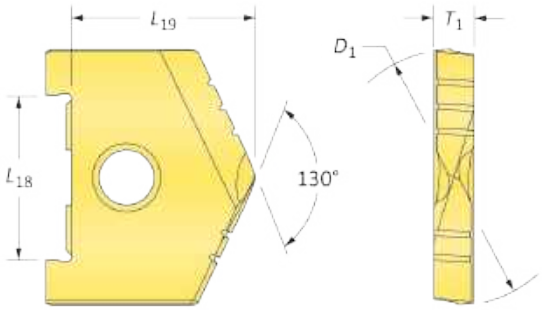

High Performance Spade Drill Inserts

Series	D_1 inch Fraction	D_1 inch Decimal	Insert L_{18}	Insert L_{19}	Insert T_1	TiN Part No.	TiAlN Part No.	TiCN Part No.
B	1-1/4	1.2500	1-1/16	1-3/32	9/32	**1022T-0108**	**1022A-0108**	**1022N-0108**
	1-9/32	1.2813	1-1/16	1-3/32	9/32	**1022T-0109**	**1022A-0109**	**1022N-0109**
	1-5/16	1.3125	1-1/16	1-3/32	9/32	**1022T-0110**	**1022A-0110**	**1022N-0110**
	1-11/32	1.3438	1-1/16	1-3/32	9/32	**1022T-0111**	**1022A-0111**	**1022N-0111**
	1-3/8	1.3750	1-1/16	1-3/32	9/32	**1022T-0112**	**1022A-0112**	**1022N-0112**
	1-13/32	1.4063	1-1/16	1-3/32	9/32	**1022T-0113**	**1022A-0113**	**1022N-0113**
	1-7/16	1.4375	1-1/16	1-3/32	9/32	**1022T-0114**	**1022A-0114**	**1022N-0114**
	1-15/32	1.4688	1-1/16	1-3/32	9/32	**1022T-0115**	**1022A-0115**	**1022N-0115**
	1-1/2	1.5000	1-1/16	1-3/32	9/32	**1022T-0116**	**1022A-0116**	**1022N-0116**
B Oversize	1-17/32	1.5313	1-1/16	1-3/32	9/32	**1022T-0117**	**1022A-0117**	**1022N-0117**
	1-9/16	1.5625	1-1/16	1-3/32	9/32	**1022T-0118**	**1022A-0118**	**1022N-0118**
	1-19/32	1.5938	1-1/16	1-3/32	9/32	**1022T-0119**	**1022A-0119**	**1022N-0119**
	1-5/8	1.6250	1-1/16	1-3/32	9/32	**1022T-0120**	**1022A-0120**	**1022N-0120**
	1-21/32	1.6563	1-1/16	1-3/32	9/32	**1022T-0121**	**1022A-0121**	**1022N-0121**
	1-11/16	1.6875	1-1/16	1-3/32	9/32	**1022T-0122**	**1022A-0122**	**1022N-0122**
	1-23/32	1.7188	1-1/16	1-3/32	9/32	**1022T-0123**	**1022A-0123**	**1022N-0123**
	1-3/4	1.7500	1-1/16	1-3/32	9/32	**1022T-0124**	**1022A-0124**	**1022N-0124**

Inserts sold in multiples of 1.

Flat Bottom

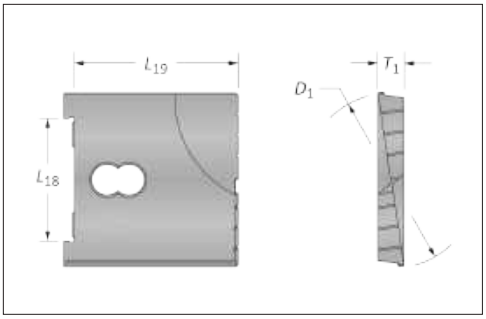

90° Spot & Chamfer

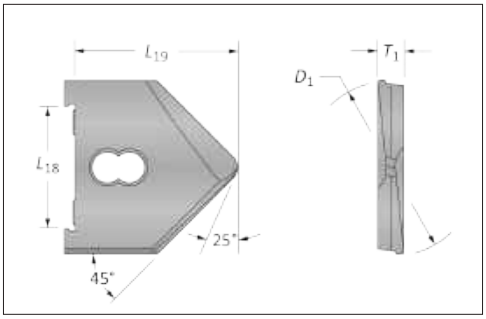

Universal Spade Drill Inserts

Series	D_1 inch Fraction	D_1 inch Decimal	Insert L_{18}	Insert L_{19}	Insert T_1	Flat Bottom	90° Spot & Chamfer
B	1-1/4	1.2500	1-1/16	1-13/32	9/32	**10424-0108**	—
	1-5/16	1.3125	1-1/16	1-13/32	9/32	**10424-0110**	—
	1-3/8	1.3750	1-1/16	1-13/32	9/32	**10424-0112**	—
	1-7/16	1.4375	1-1/16	1-13/32	9/32	**10424-0114**	—
	1-1/2	1.5000	1-1/16	1-13/32	9/32	**10424-0116**	**11224-0116**

Inserts sold in multiples of 1.

A40: 30 - 33

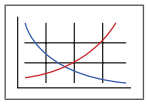

Key on A40: 1

A40: 9

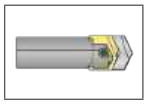

Sizes not shown are available upon request.
When ordering, please follow the example below:

Inch:	1-21/64", High Performance (B series), TiN = use Part No. **1022T-1.3281**
Decimal:	1.4500", High Performance (B series), TiN = use Part No. **1022T-1.4500**

High Performance / Universal Spade Drill Insert Holders

B Series

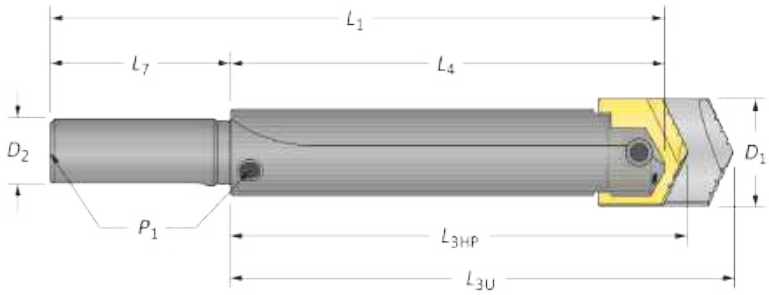

Straight Shank

	Length	D_1 Range	Holder L_{3HP}	L_{3U}	L_4	L_1	Shank D_2	L_7	P_1	Style	Part No.
	Short	1.2500 - 1.7500	3.781	4.094	3.500	7.000	1	3.500	—	#150	**20421-1000**
	Short	1.2500 - 1.7500	3.781	4.094	3.500	7.000	1	3.500	1/4 NPT	#100	**20621-1000**
	Short	1.2500 - 1.7500	3.781	4.094	3.500	7.000	1-1/4	3.500	1/4 NPT	#100	**20621-1250**
ⓘ	Short	1.2500 - 1.7500	3.781	4.094	3.500	7.000	1-1/2	3.500	1/4 NPT	#100	**20621-1500**
	Standard	1.2500 - 1.7500	8.406	8.719	8.125	11.625	1	3.500	1/4 NPT	#200	**20821-1000**
	Standard	1.2500 - 1.7500	8.406	8.719	8.125	11.625	1-1/4	3.500	1/4 NPT	#200	**20821-1250**
	Standard	1.2500 - 1.7500	8.406	8.719	8.125	11.625	1-1/2	3.500	1/4 NPT	#200	**20821-1500**
	Long	1.2500 - 1.7500	15.281	15.594	15.000	18.500	1-1/4	3.500	1/4 NPT	#250	⚠ **21021-1250**

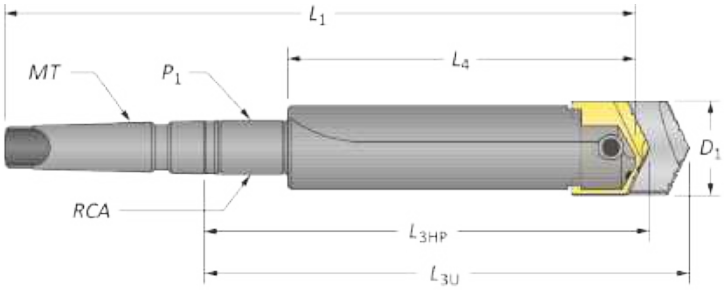

Taper Shank

	Length	D_1 Range	Holder L_{3HP}	L_{3U}	L_4	L_1	Shank MT	P_1	RCA	Style	Part No.
	Short	1.2500 - 1.7500	3.969	4.281	3.500	7.375	#3 MT	—	—	#300	**21421-0003**
	Short	1.2500 - 1.7500	4.031	4.344	3.500	8.375	#4 MT	—	—	#300	**21421-0004**
	Short	1.2500 - 1.7500	4.031	4.344	3.500	8.375	#4 MT	—	—	#300 TSC	**21521-0004***
ⓘ	Short	1.2500 - 1.7500	5.719	6.031	3.500	10.063	#4 MT	1/4 NPT	2T-4SR	#400 SR	**21621-0004**
	Standard	1.2500 - 1.7500	10.344	10.656	8.125	14.688	#4 MT	1/4 NPT	2T-4SR	#500 SR	**21821-0004**
	Long	1.2500 - 1.7500	17.219	17.531	15.000	21.563	#4 MT	1/4 NPT	2T-4SR	#600 SR	⚠ **22021-0004**
	XL	1.2500 - 1.7500	24.219	24.531	22.000	28.563	#4 MT	1/4 NPT	2T-4SR	#700 SR	⚠ **22221-0004**

*Through shank coolant, coolant inlet diameter = 5/16".

Rotary Coolant Adapter (RCA) and Accessories

	ID	OD	L_1	Driving Rod Thread	P_1	Part No.*	RCA O-Rings Kit Part No.**	Replacements
ⓘ	1.250	2.500	1.375	3/8" - 16	1/4 NPT	⚠ **2T-4SR**	2T1-4SR	2T1-4OR-10
	1.750	3.000	1.375	3/8" - 16	1/4 NPT	⚠ **2T-5SR**	2T1-5SR	2T1-5OR-10

*RCA comes complete with (1) RCA, (2) O-rings, (2) snap rings, and (2) thrust washers.
**RCA Repair Kit includes (2) O-rings, (2) snap rings, and (2) thrust washers.
⚠ Refer to page A40: 27 for proper RCA assembly and safety information.

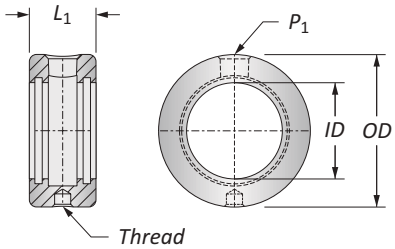

Connection Accessories

Clamping Screw Part No.	Clamping Screw Key	Blade-Loc Screw Part No.	Blade-Loc Screw Key	Pipe Plug Straight Shank Part No.	Straight Shank Key	MT Shank (with RCA) Part No.	MT Shank Key
772098-1	3/16"	—	—	**710006-1**	7/32"	**710006-1**	7/32"

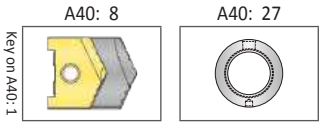

ⓘ = Imperial (in)
ⓜ = Metric (mm)
O-rings sold in packs of 10.

⚠ **WARNING** Refer to Speed and Feed charts for recommended adjustments to speeds and feeds. Refer to page A40: 34 for deep hole drilling guidelines in this section of the catalog. Visit **www.alliedmachine.com/DeepHoleGuidelines** for the most up-to-date information and procedures. Factory technical assistance is available for your specific applications through our Application Engineering Team.

High Performance Spade Drill Inserts

C Series | Diameter Range: 1.5000" - 2.3750"

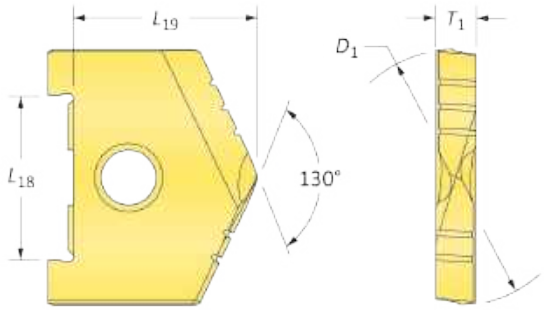

Series	D_1 inch Fraction	D_1 inch Decimal	Insert L_{18}	Insert L_{19}	Insert T_1	TiN Part No.	TiAlN Part No.	TiCN Part No.
C	1-1/2	1.5000	1-1/4	1-19/64	5/16	**1023T-0116**	**1023A-0116**	**1023N-0116**
	1-17/32	1.5313	1-1/4	1-19/64	5/16	**1023T-0117**	**1023A-0117**	**1023N-0117**
	1-9/16	1.5625	1-1/4	1-19/64	5/16	**1023T-0118**	**1023A-0118**	**1023N-0118**
	1-19/32	1.5938	1-1/4	1-19/64	5/16	**1023T-0119**	**1023A-0119**	**1023N-0119**
	1-5/8	1.6250	1-1/4	1-19/64	5/16	**1023T-0120**	**1023A-0120**	**1023N-0120**
	1-21/32	1.6563	1-1/4	1-19/64	5/16	**1023T-0121**	**1023A-0121**	**1023N-0121**
	1-11/16	1.6875	1-1/4	1-19/64	5/16	**1023T-0122**	**1023A-0122**	**1023N-0122**
	1-23/32	1.7188	1-1/4	1-19/64	5/16	**1023T-0123**	**1023A-0123**	**1023N-0123**
	1-3/4	1.7500	1-1/4	1-19/64	5/16	**1023T-0124**	**1023A-0124**	**1023N-0124**
	1-25/32	1.7813	1-1/4	1-19/64	5/16	**1023T-0125**	**1023A-0125**	**1023N-0125**
	1-13/16	1.8125	1-1/4	1-19/64	5/16	**1023T-0126**	**1023A-0126**	**1023N-0126**
	1-27/32	1.8438	1-1/4	1-19/64	5/16	**1023T-0127**	**1023A-0127**	**1023N-0127**
	1-7/8	1.8750	1-1/4	1-19/64	5/16	**1023T-0128**	**1023A-0128**	**1023N-0128**
	1-29/32	1.9063	1-1/4	1-19/64	5/16	**1023T-0129**	**1023A-0129**	**1023N-0129**
	1-15/16	1.9375	1-1/4	1-19/64	5/16	**1023T-0130**	**1023A-0130**	**1023N-0130**
	1-31/32	1.9688	1-1/4	1-19/64	5/16	**1023T-0131**	**1023A-0131**	**1023N-0131**
	2	2.0000	1-1/4	1-19/64	5/16	**1023T-0200**	**1023A-0200**	**1023N-0200**
C Oversize	2-1/32	2.0313	1-1/4	1-19/64	5/16	**1023T-0201**	**1023A-0201**	**1023N-0201**
	2-1/16	2.0625	1-1/4	1-19/64	5/16	**1023T-0202**	**1023A-0202**	**1023N-0202**
	2-3/32	2.0938	1-1/4	1-19/64	5/16	**1023T-0203**	**1023A-0203**	**1023N-0203**
	2-1/8	2.1250	1-1/4	1-19/64	5/16	**1023T-0204**	**1023A-0204**	**1023N-0204**
	2-5/32	2.1563	1-1/4	1-19/64	5/16	**1023T-0205**	**1023A-0205**	**1023N-0205**
	2-3/16	2.1875	1-1/4	1-19/64	5/16	**1023T-0206**	**1023A-0206**	**1023N-0206**
	2-7/32	2.2188	1-1/4	1-19/64	5/16	**1023T-0207**	**1023A-0207**	**1023N-0207**
	2-1/4	2.2500	1-1/4	1-19/64	5/16	**1023T-0208**	**1023A-0208**	**1023N-0208**
	2-9/32	2.2813	1-1/4	1-19/64	5/16	**1023T-0209**	**1023A-0209**	**1023N-0209**
	2-5/16	2.3125	1-1/4	1-19/64	5/16	**1023T-0210**	**1023A-0210**	**1023N-0210**
	2-11/32	2.3438	1-1/4	1-19/64	5/16	**1023T-0211**	**1023A-0211**	**1023N-0211**
	2-3/8	2.3750	1-1/4	1-19/64	5/16	**1023T-0212**	**1023A-0212**	**1023N-0212**

Inserts sold in multiples of 1.

A40: 30 - 33

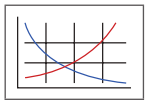

Key on A40: 1

A40: 12 - 13

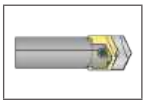

Sizes not shown are available upon request.
When ordering, please follow the example below:

Inch:	1-63/64", High Performance (C series), TiN = use Part No. **1023T-1.9844**
Decimal:	1.9763", High Performance (C series), TiN = use Part No. **1023T-1.9763**

Universal Spade Drill Inserts

C Series | Diameter Range: 1.5000" - 2.3750"

Flat Bottom

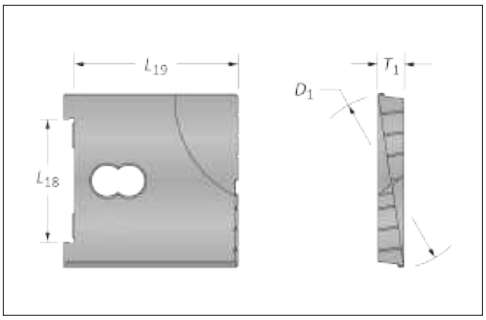

90° Spot & Chamfer

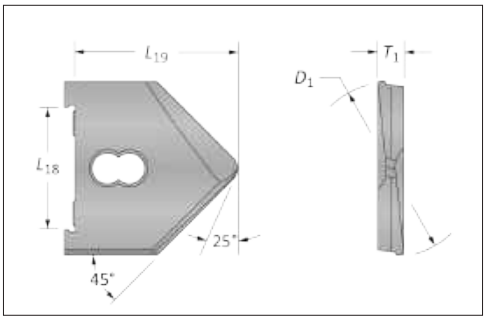

Series	D_1 inch Fraction	D_1 inch Decimal	Insert L_{18}	Insert L_{19}	Insert T_1	Flat Bottom	90° Spot & Chamfer
C	1-1/2	1.5000	1-1/4	2	5/16	**10434-0116**	—
	1-9/16	1.5625	1-1/4	2	5/16	**10434-0118**	—
	1-5/8	1.6250	1-1/4	2	5/16	**10434-0120**	—
	1-11/16	1.6875	1-1/4	2	5/16	**10434-0122**	—
	1-3/4	1.7500	1-1/4	2	5/16	**10434-0124**	—
	1-13/16	1.8125	1-1/4	2	5/16	**10434-0126**	—
	1-7/8	1.8750	1-1/4	2	5/16	**10434-0128**	—
	1-15/16	1.9375	1-1/4	2	5/16	**10434-0130**	—
	2	2.0000	1-1/4	2	5/16	**10434-0200**	**11234-0200**

Inserts sold in multiples of 1.

A40: 30 - 33
Key on A40: 1

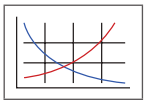

A40: 12 - 13

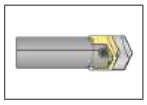

A40: 2

High Performance / Universal Spade Drill Insert Holders

C Series

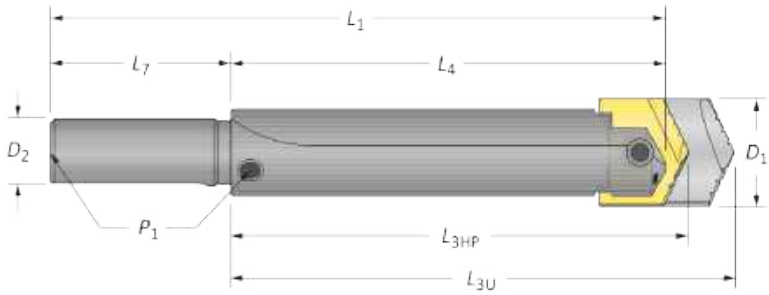

Straight Shank

	Length	D_1	Holder L_{3HP}	L_{3U}	L_4	L_1	Shank D_2	L_7	P_1	Style	Part No.
	Stub	1.5000 - 2.3750	2.297	3.000	2.000	6.000	1-1/2	4.000	—	#125	**20231-1500**
	Short	1.5000 - 2.3750	4.297	5.000	4.000	8.000	1-1/4	4.000	—	#150	**20431-1250**
	Short	1.5000 - 2.3750	4.297	5.000	4.000	8.000	1-1/4	4.000	1/4 NPT	#100	**20631-1250**
i	Short	1.5000 - 2.3750	4.297	5.000	4.000	8.000	1-1/2	4.000	1/4 NPT	#100	**20631-1500**
	Standard	1.5000 - 2.3750	8.797	9.500	8.500	12.500	1-1/4	4.000	1/4 NPT	#200	**20831-1250**
	Standard	1.5000 - 2.3750	8.797	9.500	8.500	12.500	1-1/2	4.000	1/4 NPT	#200	**20831-1500**
	Long	1.5000 - 2.3750	18.297	19.000	18.000	22.000	1-1/2	4.000	1/4 NPT	#250	⚠ **21031-1500**

Connection Accessories

Clamping Screw		Blade-Loc Screw		Pipe Plug: Straight Shank		Pipe Plug: MT Shank (with RCA)	
Part No.	Key	Part No.	Key	Part No.	Key	Part No.	Key
772074-1	5/64"	—	—	**710004-1**	5/32"	**710006-1**	7/32"

A40: 10 - 11

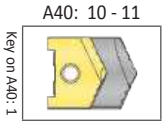

i = Imperial (in)
m = Metric (mm)

⚠ **WARNING** Refer to Speed and Feed charts for recommended adjustments to speeds and feeds. Refer to page A40: 34 for deep hole drilling guidelines in this section of the catalog. Visit **www.alliedmachine.com/DeepHoleGuidelines** for the most up-to-date information and procedures. Factory technical assistance is available for your specific applications through our Application Engineering Team.

High Performance / Universal Spade Drill Insert Holders

C Series

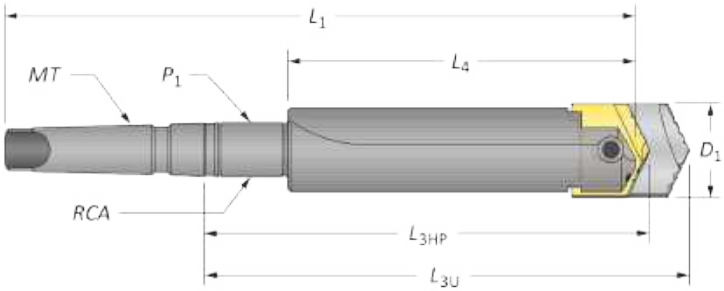

Taper Shank

	Length	D_1	Holder L_{3HP}	Holder L_{3U}	Holder L_4	Holder L_1	Shank MT	Shank P_1	Shank RCA	Shank Style	Part No.
	Short	1.5000 - 2.3750	4.547	5.250	4.000	8.875	#4 MT	—	—	#300	**21431-0004**
	Short	1.5000 - 2.3750	4.547	5.250	4.000	8.875	#4 MT	—	—	#300 TSC	**21531-0004***
	Short	1.5000 - 2.3750	4.547	5.250	4.000	10.125	#5 MT	—	—	#300 TSC	**21531-0005***
	Short	1.5000 - 2.3750	6.234	6.938	4.000	10.563	#4 MT	1/4 NPT	2T-4SR	#400 SR	**21631-0004**
ⓘ	Standard	1.5000 - 2.3750	10.734	11.438	8.500	15.063	#4 MT	1/4 NPT	2T-4SR	#500 SR	**21831-0004**
	Standard	1.5000 - 2.3750	10.734	11.438	8.500	16.313	#5 MT	1/4 NPT	2T-5SR	#500 SR	**21831-0005**
	Long	1.5000 - 2.3750	20.234	20.938	18.000	24.563	#4 MT	1/4 NPT	2T-4SR	#600 SR	⚠ **22031-0004**
	Long	1.5000 - 2.3750	20.234	20.938	18.000	25.813	#5 MT	1/4 NPT	2T-5SR	#600 SR	⚠ **22031-0005**
	XL	1.5000 - 2.3750	28.234	28.938	26.000	32.563	#4 MT	1/4 NPT	2T-4SR	#700 SR	⚠ **22231-0004**
	XL	1.5000 - 2.3750	28.234	28.938	26.000	33.813	#5 MT	1/4 NPT	2T-5SR	#700 SR	⚠ **22231-0005**

*Through shank coolant, coolant inlet diameter = 5/16".

Rotary Coolant Adapter (RCA) and Accessories

	ID	OD	L_1	Driving Rod Thread	P_1	Part No.*	RCA O-Rings Kit Part No.**	RCA O-Rings Replacements
ⓘ	1.250	2.500	1.375	3/8" - 16	1/4 NPT	⚠ **2T-4SR**	2T1-4SR	2T1-4OR-10
	1.750	3.000	1.375	3/8" - 16	1/4 NPT	⚠ **2T-5SR**	2T1-5SR	2T1-5OR-10

*RCA comes complete with (1) RCA, (2) O-rings, (2) snap rings, and (2) thrust washers.
**RCA Repair Kit includes (2) O-rings, (2) snap rings, and (2) thrust washers.
⚠ Refer to page A40: 27 for proper RCA assembly and safety information.

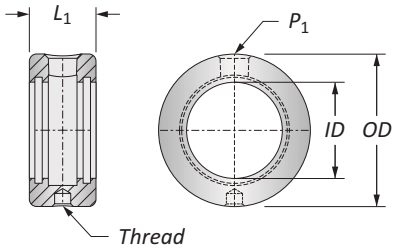

Connection Accessories

Clamping Screw Part No.	Clamping Screw Key	Blade-Loc Screw Part No.	Blade-Loc Screw Key	Pipe Plug Straight Shank Part No.	Pipe Plug Straight Shank Key	Pipe Plug MT Shank (with RCA) Part No.	Pipe Plug MT Shank (with RCA) Key
772100-1	3/16"	—	—	**710006-1**	7/32"	**710006-1**	7/32"

A40: 10 - 11

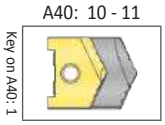

A40: 27

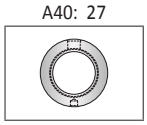

ⓘ = Imperial (in)
ⓜ = Metric (mm)
O-rings sold in packs of 10.

⚠ **WARNING** Refer to Speed and Feed charts for recommended adjustments to speeds and feeds. Refer to page A40: 34 for deep hole drilling guidelines in this section of the catalog. Visit **www.alliedmachine.com/DeepHoleGuidelines** for the most up-to-date information and procedures. Factory technical assistance is available for your specific applications through our Application Engineering Team.

A DRILLING
B BORING
C REAMING
D BURNISHING
E THREADING
X SPECIALS

Universal Spade Drill Inserts

D Series | Diameter Range: 2.0000" - 2.8750"

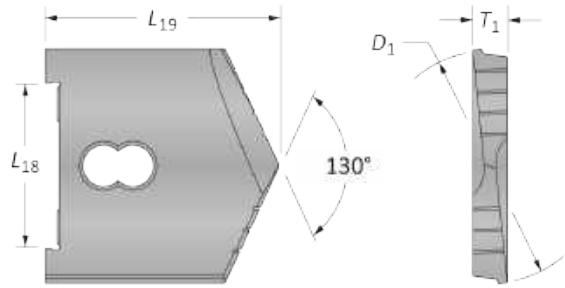

Series	D_1 inch Fraction	D_1 inch Decimal	Insert L_{18}	Insert L_{19}	Insert T_1	130° CPM-M4	Flat Bottom	90° Spot & Chamfer
D	2	2.0000	1-3/4	2-3/8	3/8	**10244-0200**	**10444-0200**	—
	2-1/32	2.0313	1-3/4	2-3/8	3/8	**10244-0201**	—	—
	2-1/16	2.0625	1-3/4	2-3/8	3/8	**10244-0202**	**10444-0202**	—
	2-3/32	2.0938	1-3/4	2-3/8	3/8	**10244-0203**	—	—
	2-1/8	2.1250	1-3/4	2-3/8	3/8	**10244-0204**	**10444-0204**	—
	2-5-32	2.1563	1-3/4	2-3/8	3/8	**10244-0205**	—	—
	2-3-16	2.1875	1-3/4	2-3/8	3/8	**10244-0206**	**10444-0206**	—
	2-7/32	2.2188	1-3/4	2-3/8	3/8	**10244-0207**	—	—
	2-1/4	2.2500	1-3/4	2-3/8	3/8	**10244-0208**	**10444-0208**	—
	2-9/32	2.2813	1-3/4	2-3/8	3/8	**10244-0209**	—	—
	2-5/16	2.3125	1-3/4	2-3/8	3/8	**10244-0210**	**10444-0210**	—
	2-11/32	2.3438	1-3/4	2-3/8	3/8	**10244-0211**	—	—
	2-3/8	2.3750	1-3/4	2-3/8	3/8	**10244-0212**	**10444-0212**	—
	2-13/32	2.4063	1-3/4	2-3/8	3/8	**10244-0213**	—	—
	2-7/16	2.4375	1-3/4	2-3/8	3/8	**10244-0214**	**10444-0214**	—
	2-15/32	2.4688	1-3/4	2-3/8	3/8	**10244-0215**	—	—
	2-1/2	2.5000	1-3/4	2-3/8	3/8	**10244-0216**	**10444-0216**	**11244-0216**
D Oversize	2-17/32	2.5313	1-3/4	2-3/8	3/8	**10244-0217**	—	—
	2-9/16	2.5625	1-3/4	2-3/8	3/8	**10244-0218**	—	—
	2-19/32	2.5938	1-3/4	2-3/8	3/8	**10244-0219**	—	—
	2-5/8	2.6250	1-3/4	2-3/8	3/8	**10244-0220**	—	—
	2-21/32	2.6563	1-3/4	2-3/8	3/8	**10244-0221**	—	—
	2-11/16	2.6875	1-3/4	2-3/8	3/8	**10244-0222**	—	—
	2-23/32	2.7188	1-3/4	2-3/8	3/8	**10244-0223**	—	—
	2-3/4	2.7500	1-3/4	2-3/8	3/8	**10244-0224**	—	—
	2-25/35	2.7813	1-3/4	2-3/8	3/8	**10244-0225**	—	—
	2-13/16	2.8125	1-3/4	2-3/8	3/8	**10244-0226**	—	—
	2-27/32	2.8438	1-3/4	2-3/8	3/8	**10244-0227**	—	—
	2-7/8	2.8750	1-3/4	2-3/8	3/8	**10244-0228**	—	—

Inserts sold in multiples of 1.

Flat Bottom

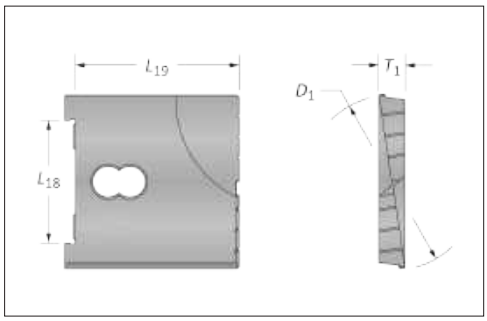

90° Spot & Chamfer

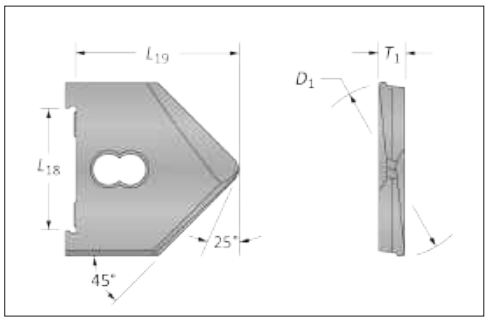

A40: 32 - 33

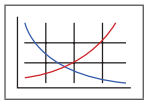

A40: 15

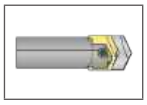

A40: 2

Sizes not shown are available upon request.
When ordering, please follow the example below:

Inch:	2-21/64", Universal (D series), 130° CPM-M4 = use Part No. **10244-2.3281**
Decimal:	2.4500", Universal (D series), 130° CPM-M4 = use Part No. **10244-2.4500**

Universal Spade Drill Insert Holders

D Series

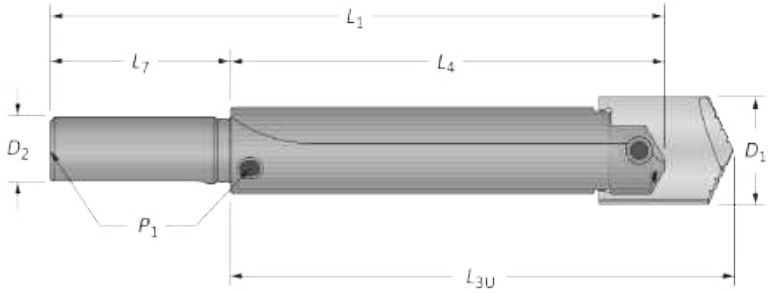

Straight Shank

	Length	D_1	L_{3U}	L_4	L_1	Shank D_2	Shank L_7	Shank P_1	Shank Style	Part No.
	Stub	2.0000 - 2.8750	3.250	2.250	6.250	1-1/2	4.000	—	#125	**20241-1500**
	Short	2.0000 - 2.8750	5.500	4.500	8.500	1-1/2	4.000	—	#150	**20441-1500**
ⓘ	Short	2.0000 - 2.8750	5.500	4.500	8.500	1-1/2	4.000	1/4 NPT	#100	**20641-1500**
	Standard	2.0000 - 2.8750	10.000	9.000	13.000	1-1/2	4.000	1/4 NPT	#200	**20841-1500**
	Long	2.0000 - 2.8750	19.000	18.000	22.000	1-1/2	4.000	1/4 NPT	#250	⚠ **21041-1500**

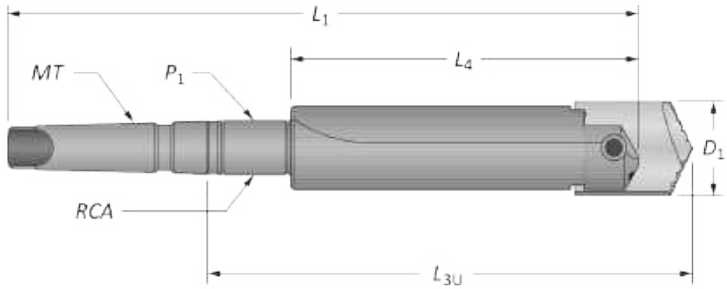

Taper Shank

	Length	D_1	L_{3U}	L_4	L_1	Shank *MT*	Shank P_1	Shank RCA	Shank Style	Part No.
	Short	2.0000 - 2.8750	5.750	4.500	9.375	#4 MT	—	—	#300	**21441-0004**
	Short	2.0000 - 2.8750	5.750	4.500	10.625	#5 MT	—	—	#300	**21441-0005**
	Short	2.0000 - 2.8750	5.750	4.500	9.375	#4 MT	—	—	#300 TSC	**21541-0004***
	Short	2.0000 - 2.8750	7.438	4.500	11.063	#4 MT	1/4 NPT	2T-4SR	#400 SR	**21641-0004**
ⓘ	Standard	2.0000 - 2.8750	11.938	9.000	15.563	#4 MT	1/4 NPT	2T-4SR	#500 SR	**21841-0004**
ⓘ	Standard	2.0000 - 2.8750	11.938	9.000	16.813	#5 MT	1/4 NPT	2T-5SR	#500 SR	**21841-0005**
	Long	2.0000 - 2.8750	20.938	18.000	24.563	#4 MT	1/4 NPT	2T-4SR	#600 SR	⚠ **22041-0004**
	Long	2.0000 - 2.8750	20.938	18.000	25.813	#5 MT	1/4 NPT	2T-5SR	#600 SR	⚠ **22041-0005**
	XL	2.0000 - 2.8750	30.938	28.000	34.563	#4 MT	1/4 NPT	2T-4SR	#700 SR	⚠ **22241-0004**
	XL	2.0000 - 2.8750	30.938	28.000	35.813	#5 MT	1/4 NPT	2T-5SR	#700 SR	⚠ **22241-0005**

*Through shank coolant, coolant inlet diameter = 5/16".

Rotary Coolant Adapter (RCA) and Accessories

	ID	*OD*	L_1	Driving Rod Thread	P_1	Part No.*	RCA O-Rings Kit Part No.**	RCA O-Rings Replacements
ⓘ	1.250	2.500	1.375	3/8" - 16	1/4 NPT	⚠ **2T-4SR**	2T1-4SR	2T1-4OR-10
ⓘ	1.750	3.000	1.375	3/8" - 16	1/4 NPT	⚠ **2T-5SR**	2T1-5SR	2T1-5OR-10

*RCA comes complete with (1) RCA, (2) O-rings, (2) snap rings, and (2) thrust washers.
**RCA Repair Kit includes (2) O-rings, (2) snap rings, and (2) thrust washers.
⚠ Refer to page A40: 27 for proper RCA assembly and safety information.

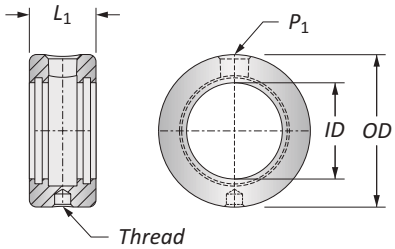

Connection Accessories

Clamping Screw Part No.	Clamping Screw Key	Blade-Loc Screw Part No.	Blade-Loc Screw Key	Pipe Plug Straight Shank Part No.	Pipe Plug Straight Shank Key	Pipe Plug MT Shank (with RCA) Part No.	Pipe Plug MT Shank (with RCA) Key
772160-1	7/16"	**724050-1**	1/8"	**710006-1**	7/32"	**710006-1**	7/32"

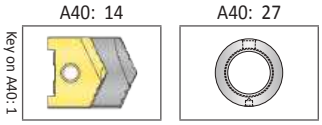

ⓘ = Imperial (in)
ⓜ = Metric (mm)
O-rings sold in packs of 10.

⚠ **WARNING** Refer to Speed and Feed charts for recommended adjustments to speeds and feeds. Refer to page A40: 34 for deep hole drilling guidelines in this section of the catalog. Visit **www.alliedmachine.com/DeepHoleGuidelines** for the most up-to-date information and procedures. Factory technical assistance is available for your specific applications through our Application Engineering Team.

Universal Spade Drill Inserts

E Series | Diameter Range: 2.5000" - 3.3750"

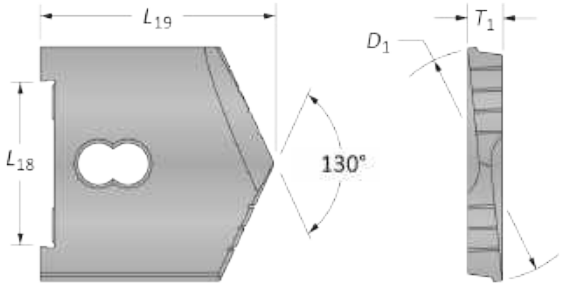

Series	D_1 inch Fraction	D_1 inch Decimal	Inserts L_{18}	Inserts L_{19}	Inserts T_1	130° CPM-M4	Flat Bottom	90° Spot & Chamfer
E	2-1/2	2.5000	2-1/16	2-5/8	7/16	**10254-0216**	**10454-0216**	—
	2-17/32	2.5313	2-1/16	2-5/8	7/16	**10254-0217**	—	—
	2-9/16	2.5625	2-1/16	2-5/8	7/16	**10254-0218**	**10454-0218**	—
	2-19/32	2.5938	2-1/16	2-5/8	7/16	**10254-0219**	—	—
	2-5/8	2.6250	2-1/16	2-5/8	7/16	**10254-0220**	**10454-0220**	—
	2-21/32	2.6563	2-1/16	2-5/8	7/16	**10254-0221**	—	—
	2-11/16	2.6875	2-1/16	2-5/8	7/16	**10254-0222**	**10454-0222**	—
	2-23/32	2.7188	2-1/16	2-5/8	7/16	**10254-0223**	—	—
	2-3/4	2.7500	2-1/16	2-5/8	7/16	**10254-0224**	**10454-0224**	—
	2-25/32	2.7813	2-1/16	2-5/8	7/16	**10254-0225**	—	—
	2-13/16	2.8125	2-1/16	2-5/8	7/16	**10254-0226**	**10454-0226**	—
	2-27/32	2.8438	2-1/16	2-5/8	7/16	**10254-0227**	—	—
	2-7/8	2.8750	2-1/16	2-5/8	7/16	**10254-0228**	**10454-0228**	—
	2-29/32	2.9063	2-1/16	2-5/8	7/16	**10254-0229**	—	—
	2-15/16	2.9375	2-1/16	2-5/8	7/16	**10254-0230**	**10454-0230**	—
	2-31/32	2.9688	2-1/16	2-5/8	7/16	**10254-0231**	—	—
	3	3.0000	2-1/16	2-5/8	7/16	**10254-0300**	**10454-0300**	**11254-0300**
E Oversize	3-1/32	3.0313	2-1/16	2-5/8	7/16	**10254-0301**	—	—
	3-1/16	3.0625	2-1/16	2-5/8	7/16	**10254-0302**	—	—
	3-3/32	3.0938	2-1/16	2-5/8	7/16	**10254-0303**	—	—
	3-1/8	3.1250	2-1/16	2-5/8	7/16	**10254-0304**	—	—
	3-5/32	3.1563	2-1/16	2-5/8	7/16	**10254-0305**	—	—
	3-3/16	3.1875	2-1/16	2-5/8	7/16	**10254-0306**	—	—
	3-7/32	3.2188	2-1/16	2-5/8	7/16	**10254-0307**	—	—
	3-1/4	3.2500	2-1/16	2-5/8	7/16	**10254-0308**	—	—
	3-9/32	3.2813	2-1/16	2-5/8	7/16	**10254-0309**	—	—
	3-5/16	3.3125	2-1/16	2-5/8	7/16	**10254-0310**	—	—
	3-11/32	3.3438	2-1/16	2-5/8	7/16	**10254-0311**	—	—
	3-3/8	3.3750	2-1/16	2-5/8	7/16	**10254-0312**	—	—

Inserts sold in multiples of 1.

Flat Bottom

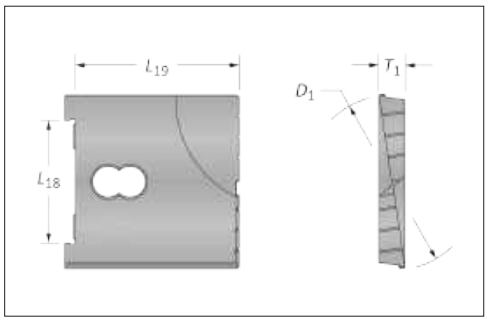

90° Spot & Chamfer

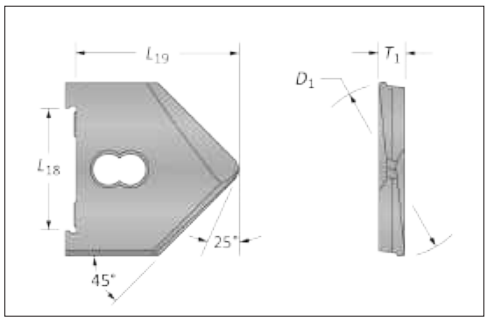

A40: 32 - 33

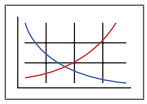

Key on A40: 1

A40: 17

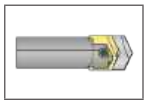

A40: 2

Sizes not shown are available upon request.
When ordering, please follow the example below:

Inch:	2-63/64", Universal (E series), 130° CPM-M4 = use Part No. **10254-2.9844**
Decimal:	2.9763", Universal (E series), 130° CPM-M4 = use Part No. **10254-2.9763**

Universal Spade Drill Insert Holders

E Series

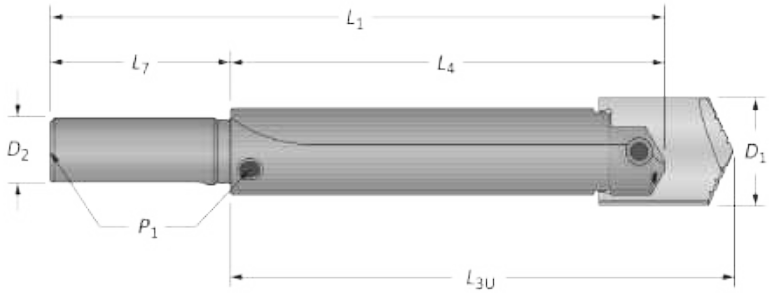

Straight Shank

	Length	D_1	L_{3U}	L_4	L_1	Shank D_2	Shank L_7	Shank P_1	Shank Style	Part No.
	Stub	2.5000 - 3.3750	3.563	2.500	6.500	2	4.000	—	#125	**20251-2000**
	Short	2.5000 - 3.3750	6.063	5.000	9.000	1-3/4	4.000	—	#150	**20451-1750**
ⓘ	Short	2.5000 - 3.3750	6.063	5.000	9.000	1-3/4	4.000	1/2 NPT	#100	**20651-1750**
	Standard	2.5000 - 3.3750	11.063	10.000	14.000	2	4.000	1/2 NPT	#200	**20851-2000**
	Long	2.5000 - 3.3750	21.063	20.000	24.000	2	4.000	1/2 NPT	#250	⚠ **21051-2000**

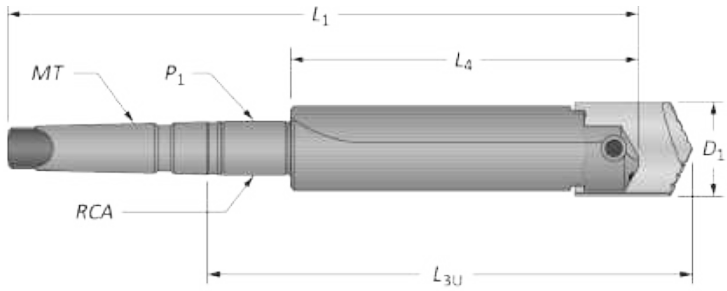

Taper Shank

	Length	D_1	L_{3U}	L_4	L_1	Shank *MT*	Shank P_1	Shank RCA	Shank Style	Part No.
	Short	2.5000 - 3.3750	6.313	5.000	9.875	#4 MT	—	—	#300	**21451-0004**
	Short	2.5000 - 3.3750	6.313	5.000	11.125	#5 MT	—	—	#300	**21451-0005**
	Short	2.5000 - 3.3750	6.313	5.000	11.125	#5 MT	—	—	#300 TSC	**21551-0005***
ⓘ	Short	2.5000 - 3.3750	8.626	5.000	13.438	#5 MT	1/2 NPT	2T-6SR	#400 SR	**21651-0005**
	Standard	2.5000 - 3.3750	13.626	10.000	18.438	#5 MT	1/2 NPT	2T-6SR	#500 SR	**21851-0005**
	Long	2.5000 - 3.3750	23.626	20.000	28.438	#5 MT	1/2 NPT	2T-6SR	#600 SR	⚠ **22051-0005**
	XL	2.5000 - 3.3750	33.626	30.000	38.438	#5 MT	1/2 NPT	2T-6SR	#700 SR	⚠ **22251-0005**

*Through shank coolant, coolant inlet diameter = 3/8".

Rotary Coolant Adapter (RCA) and Accessories

	ID	*OD*	L_1	Driving Rod Thread	P_1	Part No.*	RCA O-Rings Kit Part No.**	RCA O-Rings Replacements
ⓘ	2.250	3.750	1.750	1/2" - 13	1/2 NPT	⚠ **2T-6SR**	2T1-6SR	2T1-6OR-10

*RCA comes complete with (1) RCA, (2) O-rings, (2) snap rings, and (2) thrust washers.
**RCA Repair Kit includes (2) O-rings, (2) snap rings, and (2) thrust washers.
⚠ Refer to page A40: 27 for proper RCA assembly and safety information.

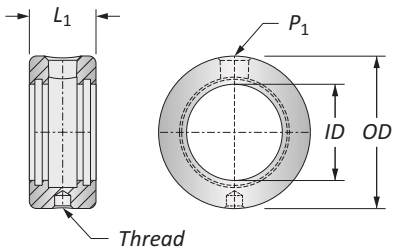

Connection Accessories

Clamping Screw Part No.	Clamping Screw Key	Blade-Loc Screw Part No.	Blade-Loc Screw Key	Pipe Plug Straight Shank Part No.	Pipe Plug Straight Shank Key	Pipe Plug MT Shank (with RCA) Part No.	Pipe Plug MT Shank (with RCA) Key
772232-1	3/8"	**724050-1**	1/8"	**710010-1**	3/8"	**710010-1**	3/8"

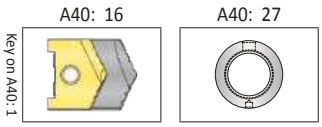

ⓘ = Imperial (in)
ⓜ = Metric (mm)
O-rings sold in packs of 10.

⚠ **WARNING** Refer to Speed and Feed charts for recommended adjustments to speeds and feeds. Refer to page A40: 34 for deep hole drilling guidelines in this section of the catalog. Visit **www.alliedmachine.com/DeepHoleGuidelines** for the most up-to-date information and procedures. Factory technical assistance is available for your specific applications through our Application Engineering Team.

Universal Spade Drill Inserts

F Series | Diameter Range: 3.0000" - 3.8750"

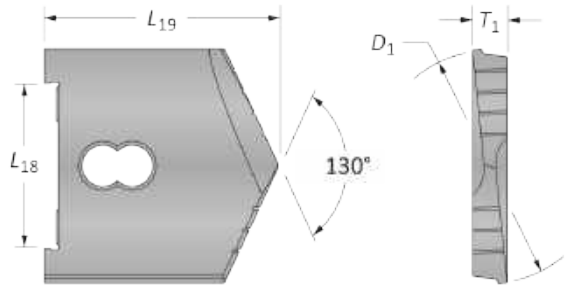

Series	D_1 inch Fraction	D_1 inch Decimal	Insert L_{18}	Insert L_{19}	Insert T_1	130° CPM-M4	Flat Bottom	90° Spot & Chamfer
F	3	3.0000	2-5/8	3-1/8	1/2	**10264-0300**	**10464-0300**	—
	3-1/32	3.0313	2-5/8	3-1/8	1/2	**10264-0301**	—	—
	3-1/16	3.0625	2-5/8	3-1/8	1/2	**10264-0302**	**10464-0302**	—
	3-3/32	3.0938	2-5/8	3-1/8	1/2	**10264-0303**	—	—
	3-1/8	3.1250	2-5/8	3-1/8	1/2	**10264-0304**	**10464-0304**	—
	3-5/32	3.1563	2-5/8	3-1/8	1/2	**10264-0305**	—	—
	3-3/16	3.1875	2-5/8	3-1/8	1/2	**10264-0306**	**10464-0306**	—
	3-7/32	3.2188	2-5/8	3-1/8	1/2	**10264-0307**	—	—
	3-1/4	3.2500	2-5/8	3-1/8	1/2	**10264-0308**	—	—
	3-9/32	3.2813	2-5/8	3-1/8	1/2	**10264-0309**	—	—
	3-5/16	3.3125	2-5/8	3-1/8	1/2	**10264-0310**	**10464-0310**	—
	3-11/32	3.3438	2-5/8	3-1/8	1/2	**10264-0311**	—	—
	3-3/8	3.3750	2-5/8	3-1/8	1/2	**10264-0312**	—	—
	3-13/32	3.4063	2-5/8	3-1/8	1/2	**10264-0313**	—	—
	3-7/16	3.4375	2-5/8	3-1/8	1/2	**10264-0314**	**10464-0314**	—
	3-15/32	3.4688	2-5/8	3-1/8	1/2	**10264-0315**	—	—
	3-1/2	3.5000	2-5/8	3-1/8	1/2	**10264-0316**	**10464-0316**	**11264-0316**
F Oversize	3-17/32	3.5313	2-5/8	3-1/8	1/2	**10264-0317**	—	—
	3-9/16	3.5625	2-5/8	3-1/8	1/2	**10264-0318**	—	—
	3-19/32	3.5938	2-5/8	3-1/8	1/2	**10264-0319**	—	—
	3-5/8	3.6250	2-5/8	3-1/8	1/2	**10264-0320**	—	—
	3-21/32	3.6563	2-5/8	3-1/8	1/2	**10264-0321**	—	—
	3-11/16	3.6875	2-5/8	3-1/8	1/2	**10264-0322**	—	—
	3-23/32	3.7188	2-5/8	3-1/8	1/2	**10264-0323**	—	—
	3-3/4	3.7500	2-5/8	3-1/8	1/2	**10264-0324**	—	—
	3-25/32	3.7813	2-5/8	3-1/8	1/2	**10264-0325**	—	—
	3-13/16	3.8125	2-5/8	3-1/8	1/2	**10264-0326**	—	—
	3-27/32	3.8438	2-5/8	3-1/8	1/2	**10264-0327**	—	—
	3-7/8	3.8750	2-5/8	3-1/8	1/2	**10264-0328**	—	—

Inserts sold in multiples of 1.

Flat Bottom

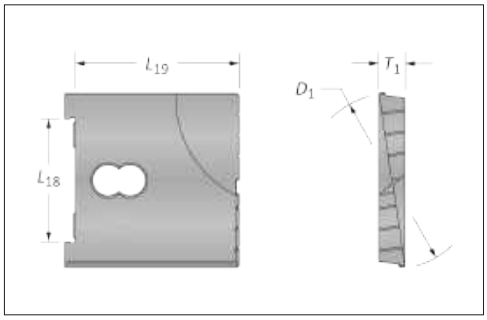

90° Spot & Chamfer

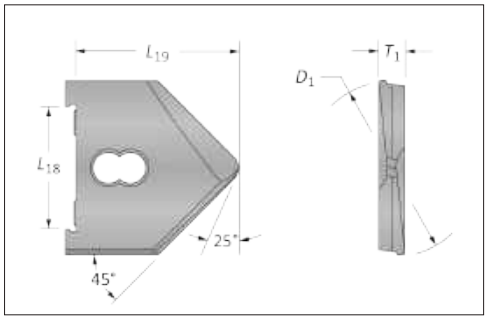

A40: 32 - 33

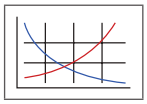

Key on A40: 1

A40: 19

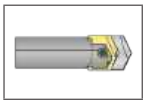

A40: 2

Sizes not shown are available upon request.
When ordering, please follow the example below:

Inch:	3-21/64", Universal (F series), 130° CPM-M4 = use Part No. **10264-3.3281**
Decimal:	3.4500", Universal (F series), 130° CPM-M4 = use Part No. **10264-3.4500**

Universal Spade Drill Insert Holders

F Series

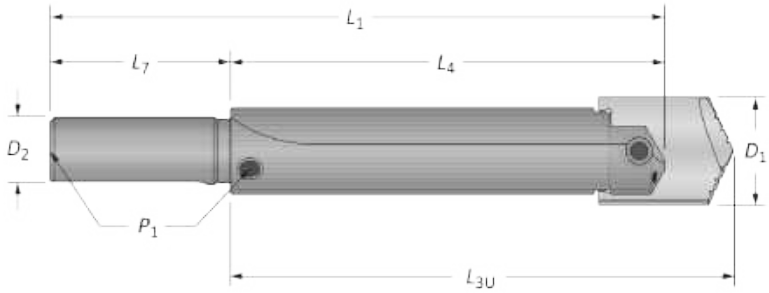

Straight Shank

	Length	D_1	L_{3U}	L_4	L_1	Shank D_2	Shank L_7	Shank P_1	Shank Style	Part No.
	Stub	3.0000 - 3.8750	4.000	2.750	6.750	2-1/2	4.000	—	#125	**20261-2500**
	Short	3.0000 - 3.8750	6.750	5.500	9.500	2	4.000	—	#150	**20461-2000**
ⓘ	Short	3.0000 - 3.8750	6.750	5.500	9.500	2	4.000	1/2 NPT	#100	**20661-2000**
	Short	3.0000 - 3.8750	6.750	5.500	9.500	2-1/2	4.000	1/2 NPT	#100	**20661-2500**
	Standard	3.0000 - 3.8750	12.750	11.500	15.500	2	4.000	1/2 NPT	#200	**20861-2000**
	Long	3.0000 - 3.8750	21.250	20.000	24.000	2-1/2	4.000	1/2 NPT	#250	⚠ **21061-2500**

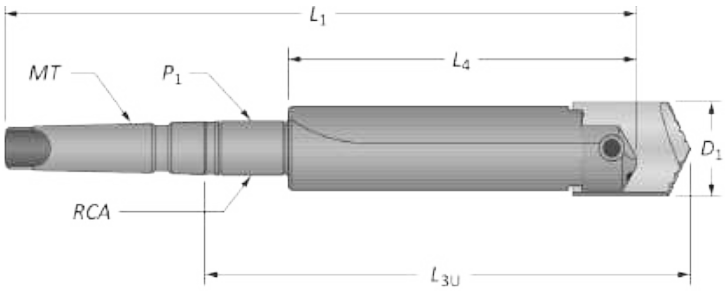

Taper Shank

	Length	D_1	L_{3U}	L_4	L_1	Shank *MT*	Shank P_1	Shank RCA	Shank Style	Part No.
	Short	3.0000 - 3.8750	7.000	5.500	11.625	#5 MT	—	—	#300	**21461-0005**
	Short	3.0000 - 3.8750	7.000	5.500	11.625	#5 MT	—	—	#300 TSC	**21561-0005***
	Short	3.0000 - 3.8750	9.313	5.500	13.938	#5 MT	1/2 NPT	2T-6SR	#400 SR	**21661-0005**
ⓘ	Standard	3.0000 - 3.8750	15.313	11.500	19.938	#5 MT	1/2 NPT	2T-6SR	#500 SR	**21861-0005**
	Long	3.0000 - 3.8750	23.813	20.000	28.438	#5 MT	1/2 NPT	2T-6SR	#600 SR	⚠ **22061-0005**
	XL	3.0000 - 3.8750	36.813	33.000	41.438	#5 MT	1/2 NPT	2T-6SR	#700 SR	⚠ **22261-0005**

*Through shank coolant, coolant inlet diameter = 3/8".

Rotary Coolant Adapter (RCA) and Accessories

	ID	*OD*	L_1	Driving Rod Thread	P_1	Part No.*	RCA O-Rings Kit Part No.**	RCA O-Rings Replacements
ⓘ	2.250	3.750	1.750	1/2" - 13	1/2 NPT	⚠ **2T-6SR**	2T1-6SR	2T1-6OR-10

*RCA comes complete with (1) RCA, (2) O-rings, (2) snap rings, and (2) thrust washers.
**RCA Repair Kit includes (2) O-rings, (2) snap rings, and (2) thrust washers.
⚠ Refer to page A40: 27 for proper RCA assembly and safety information.

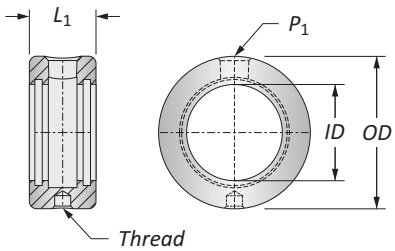

Connection Accessories

Clamping Screw Part No.	Clamping Screw Key	Blade-Loc Screw Part No.	Blade-Loc Screw Key	Pipe Plug Straight Shank Part No.	Pipe Plug Straight Shank Key	Pipe Plug MT Shank (with RCA) Part No.	Pipe Plug MT Shank (with RCA) Key
772272-1	7/16"	**724050-1**	1/8"	**710010-1**	3/8"	**710010-1**	3/8"

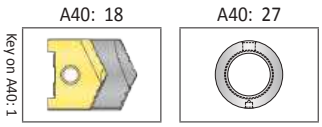

ⓘ = Imperial (in)
ⓜ = Metric (mm)
O-rings sold in packs of 10.

⚠ **WARNING** Refer to Speed and Feed charts for recommended adjustments to speeds and feeds. Refer to page A40: 34 for deep hole drilling guidelines in this section of the catalog. Visit **www.alliedmachine.com/DeepHoleGuidelines** for the most up-to-date information and procedures. Factory technical assistance is available for your specific applications through our Application Engineering Team.

Universal Spade Drill Inserts

G Series | Diameter Range: 3.5000" - 4.5000"

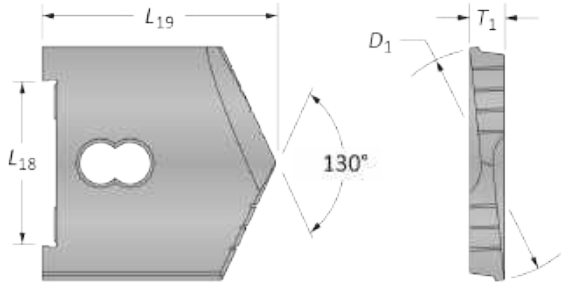

Series	D_1 inch Fraction	D_1 inch Decimal	Insert L_{18}	Insert L_{19}	Insert T_1	130° CPM-M4	Flat Bottom
G	3-1/2	3.5000	3-1/16	3-3/8	5/8	**10274-0316**	**10474-0316**
	3-17/32	3.5313	3-1/16	3-3/8	5/8	**10274-0317**	—
	3-9/16	3.5625	3-1/16	3-3/8	5/8	**10274-0318**	**10474-0318**
	3-19/32	3.5938	3-1/16	3-3/8	5/8	**10274-0319**	—
	3-5/8	3.6250	3-1/16	3-3/8	5/8	**10274-0320**	**10474-0320**
	3-21/32	3.6563	3-1/16	3-3/8	5/8	**10274-0321**	—
	3-11/16	3.6875	3-1/16	3-3/8	5/8	**10274-0322**	**10474-0322**
	3-23/32	3.7188	3-1/16	3-3/8	5/8	**10274-0323**	—
	3-3/4	3.7500	3-1/16	3-3/8	5/8	**10274-0324**	**10474-0324**
	3-25/32	3.7813	3-1/16	3-3/8	5/8	**10274-0325**	—
	3-13/16	3.8125	3-1/16	3-3/8	5/8	**10274-0326**	**10474-0326**
	3-27/32	3.8438	3-1/16	3-3/8	5/8	**10274-0327**	—
	3-7/8	3.8750	3-1/16	3-3/8	5/8	**10274-0328**	**10474-0328**
	3-29/32	3.9063	3-1/16	3-3/8	5/8	**10274-0329**	—
	3-15/16	3.9375	3-1/16	3-3/8	5/8	**10274-0330**	**10474-0330**
	3-31/32	3.9688	3-1/16	3-3/8	5/8	**10274-0331**	—
	4	4.0000	3-1/16	3-3/8	5/8	**10274-0400**	**10474-0400**
G Oversize	4-1/16	4.0625	3-1/16	3-3/8	5/8	**10274-0402**	—
	4-1/8	4.1250	3-1/16	3-3/8	5/8	**10274-0404**	—
	4-3/16	4.1875	3-1/16	3-3/8	5/8	**10274-0406**	—
	4-1/4	4.2500	3-1/16	3-3/8	5/8	**10274-0408**	—
	4-5/16	4.3125	3-1/16	3-3/8	5/8	**10274-0410**	—
	4-3/8	4.3750	3-1/16	3-3/8	5/8	**10274-0412**	—
	4-7/16	4.4375	3-1/16	3-3/8	5/8	**10274-0414**	—
	4-1/2	4.5000	3-1/16	3-3/8	5/8	**10274-0416**	—

Inserts sold in multiples of 1.

Flat Bottom

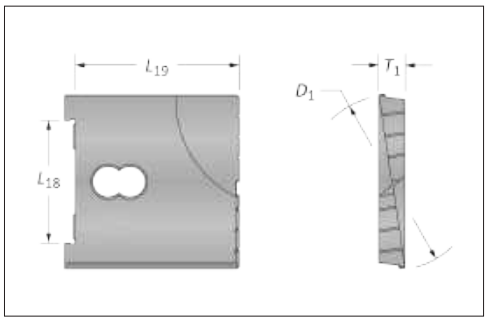

A40: 32 - 33

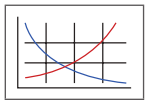

Key on A40: 1

A40: 21

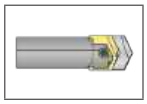

A40: 2

Sizes not shown are available upon request.
When ordering, please follow the example below:

Inch:	3-63/64", Universal (G series), 130° CPM-M4 = use Part No. **10274-3.9844**
Decimal:	3.9763", Universal (G series), 130° CPM-M4 = use Part No. **10274-3.9763**

Universal Spade Drill Insert Holders

G Series

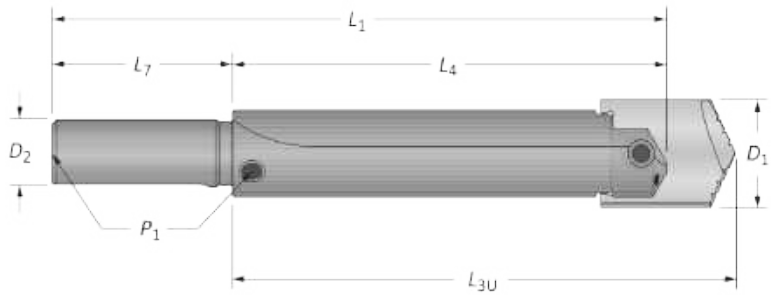

Straight Shank

	Length	D_1	L_{3U}	L_4	L_1	Shank D_2	Shank L_7	Shank P_1	Shank Style	Part No.
ⓘ	Short	3.5000 - 4.5000	7.438	6.000	11.000	2-1/2	5.000	1/2 NPT	#100	**20671-2500**
	Standard	3.5000 - 4.5000	14.438	13.000	18.000	2-1/2	5.000	1/2 NPT	#200	**20871-2500**

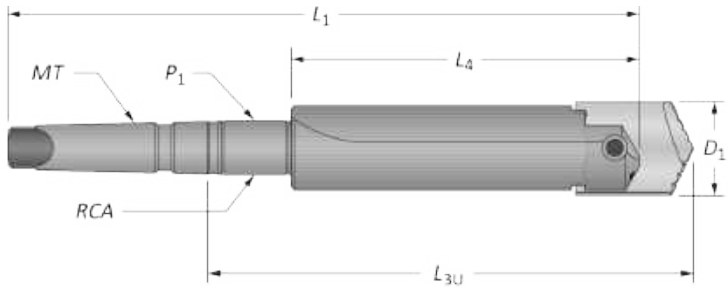

Taper Shank

	Length	D_1	L_{3U}	L_4	L_1	Shank MT	Shank P_1	Shank RCA	Shank Style	Part No.
ⓘ	Short	3.5000 - 4.5000	7.688	6.000	12.125	#5 MT	—	—	#300	**21471-0005**
	Short	3.5000 - 4.5000	7.688	6.000	12.125	#5 MT	—	—	#300 TSC	**21571-0005***
	Short	3.5000 - 4.5000	10.000	6.000	14.438	#5 MT	1/2 NPT	2T-6SR	#400 SR	**21671-0005**
	Standard	3.5000 - 4.5000	17.000	13.000	21.438	#5 MT	1/2 NPT	2T-6SR	#500 SR	**21871-0005**
	Long	3.5000 - 4.5000	28.000	24.000	32.438	#5 MT	1/2 NPT	2T-6SR	#600 SR	⚠ **22071-0005**
	XL	3.5000 - 4.5000	41.000	37.000	45.438	#5 MT	1/2 NPT	2T-6SR	#700 SR	⚠ **22271-0005**

*Through shank coolant, coolant inlet diameter = 3/8".

Rotary Coolant Adapter (RCA) and Accessories

	ID	OD	L_1	Driving Rod Thread	P_1	Part No.*	RCA O-Rings Kit Part No.**	RCA O-Rings Replacements
ⓘ	2.250	3.750	1.750	1/2" - 13	1/2 NPT	⚠ **2T-6SR**	2T1-6SR	2T1-6OR-10

*RCA comes complete with (1) RCA, (2) O-rings, (2) snap rings, and (2) thrust washers.
**RCA Repair Kit includes (2) O-rings, (2) snap rings, and (2) thrust washers.
⚠ Refer to page A40: 27 for proper RCA assembly and safety information.

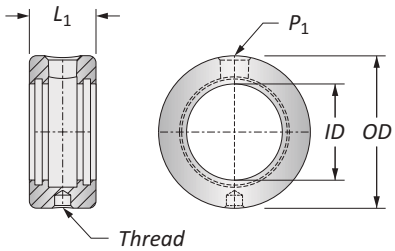

Connection Accessories

Clamping Screw Part No.	Clamping Screw Key	Blade-Loc Screw Part No.	Blade-Loc Screw Key	Pipe Plug Straight Shank Part No.	Pipe Plug Straight Shank Key	Pipe Plug MT Shank (with RCA) Part No.	Pipe Plug MT Shank (with RCA) Key
772312-1	5/8"	**724050-1**	1/8"	**710010-1**	3/8"	**710010-1**	3/8"

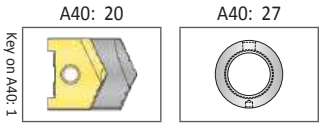

ⓘ = Imperial (in)
ⓜ = Metric (mm)
O-rings sold in packs of 10.

⚠ **WARNING** Refer to Speed and Feed charts for recommended adjustments to speeds and feeds. Refer to page A40: 34 for deep hole drilling guidelines in this section of the catalog. Visit **www.alliedmachine.com/DeepHoleGuidelines** for the most up-to-date information and procedures. Factory technical assistance is available for your specific applications through our Application Engineering Team.

Universal Spade Drill Inserts

H[1] - H[2] Series | Diameter Range: 4.0000" - 5.0000"

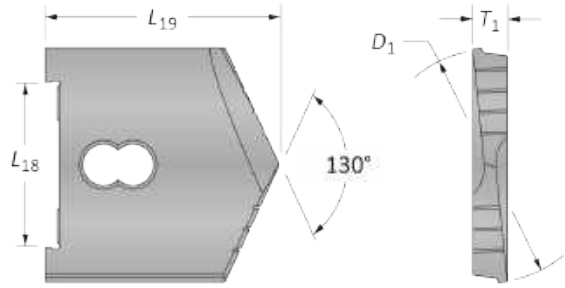

Series	D_1 inch Fraction	D_1 inch Decimal	Insert L_{18}	Insert L_{19}	Insert T_1	130° CPM-M4	Flat Bottom
H[1]	4	4.0000	3-1/2	3-11/16	11/16	**10284-0400**	**10484-0400**
	4-1/16	4.0625	3-1/2	3-11/16	11/16	**10284-0402**	**–**
	4-1/8	4.1250	3-1/2	3-11/16	11/16	**10284-0404**	**10484-0404**
	4-3/16	4.1875	3-1/2	3-11/16	11/16	**10284-0406**	**–**
	4-1/4	4.2500	3-1/2	3-11/16	11/16	**10284-0408**	**10484-0408**
	4-5/16	4.3125	3-1/2	3-11/16	11/16	**10284-0410**	**–**
	4-3/8	4.3750	3-1/2	3-11/16	11/16	**10284-0412**	**10484-0412**
	4-7/16	4.4375	3-1/2	3-11/16	11/16	**10284-0414**	**–**
	4-1/2	4.5000	3-1/2	3-11/16	11/16	**10284-0416**	**10484-0416**
H[2]	4-9/16	4.5625	3-1/2	3-11/16	11/16	**10284-0418**	**–**
	4-5/8	4.6250	3-1/2	3-11/16	11/16	**10284-0420**	**10484-0420**
	4-11/16	4.6875	3-1/2	3-11/16	11/16	**10284-0422**	**–**
	4-3/4	4.7500	3-1/2	3-11/16	11/16	**10284-0424**	**10484-0424**
	4-13/16	4.8125	3-1/2	3-11/16	11/16	**10284-0426**	**–**
	4-7/8	4.8750	3-1/2	3-11/16	11/16	**10284-0428**	**10484-0428**
	4-15/16	4.9375	3-1/2	3-11/16	11/16	**10284-0430**	**–**
	5	5.0000	3-1/2	3-11/16	11/16	**10284-0500**	**10484-0500**

Inserts sold in multiples of 1.

A40: 32 - 33

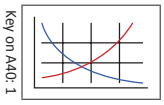

Key on A40: 1

A40: 24

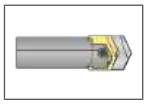

A40: 2

Sizes not shown are available upon request.
When ordering, please follow the example below:

Inch:	4-21/64", Universal (H[1] series), 130° CPM-M4 = use Part No. **10284-4.3281**
Decimal:	4.4500", Universal (H[1] series), 130° CPM-M4 = use Part No. **10284-4.4500**

Universal Spade Drill Inserts

H^3 - H^9 Series | Diameter Range: 5.0001" - 8.5000"

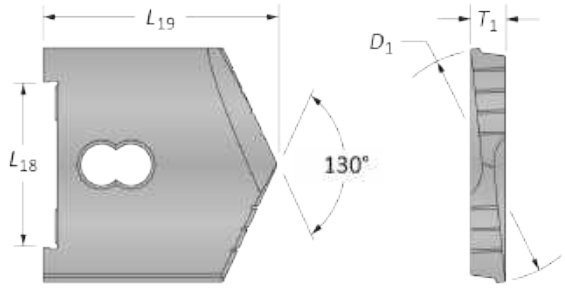

Series	D_1 inch Fraction	D_1 inch Decimal	Insert L_{18}	Insert L_{19}	Insert T_1	130° CPM-M4
H^3	5-1/8	5.1250	3-1/2	3-11/16	11/16	**10294-0504**
	5-1/4	5.2500	3-1/2	3-11/16	11/16	**10294-0508**
	5-3/8	5.3750	3-1/2	3-11/16	11/16	**10294-0512**
	5-1/2	5.5000	3-1/2	3-11/16	11/16	**10294-0516**
H^4	5-5/8	5.6250	3-1/2	3-11/16	11/16	**10294-0520**
	5-3/4	5.7500	3-1/2	3-11/16	11/16	**10294-0524**
	5-7/8	5.8750	3-1/2	3-11/16	11/16	**10294-0528**
	6	6.0000	3-1/2	3-11/16	11/16	**10294-0600**
H^5	6-1/8	6.1250	3-1/2	3-11/16	11/16	**10294-0604**
	6-1/4	6.2500	3-1/2	3-11/16	11/16	**10294-0608**
	6-3/8	6.3750	3-1/2	3-11/16	11/16	**10294-0612**
	6-1/2	6.5000	3-1/2	3-11/16	11/16	**10294-0616**
H^6	6-5/8	6.6250	3-1/2	3-11/16	11/16	**10294-0620**
	6-3/4	6.7500	3-1/2	3-11/16	11/16	**10294-0624**
	6-7/8	6.8750	3-1/2	3-11/16	11/16	**10294-0628**
	7	7.0000	3-1/2	3-11/16	11/16	**10294-0700**
H^7	7-1/8	7.1250	3-1/2	3-11/16	11/16	**10294-0704**
	7-1/4	7.2500	3-1/2	3-11/16	11/16	**10294-0708**
	7-3/8	7.3750	3-1/2	3-11/16	11/16	**10294-0712**
	7-1/2	7.5000	3-1/2	3-11/16	11/16	**10294-0716**
H^8	7-5/8	7.6250	3-1/2	3-11/16	11/16	**10294-0720**
	7-3/4	7.7500	3-1/2	3-11/16	11/16	**10294-0724**
	7-7/8	7.8750	3-1/2	3-11/16	11/16	**10294-0728**
	8	8.0000	3-1/2	3-11/16	11/16	**10294-0800**
H^9	8-1/8	8.1250	3-1/2	3-11/16	11/16	**10294-0804**
	8-1/4	8.2500	3-1/2	3-11/16	11/16	**10294-0808**
	8-3/8	8.3750	3-1/2	3-11/16	11/16	**10294-0812**
	8-1/2	8.5000	3-1/2	3-11/16	11/16	**10294-0816**

Inserts sold in multiples of 1.

A40: 32 - 33
Key on A40: 1

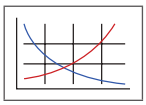

A40: 24

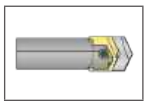

A40: 2

Sizes not shown are available upon request.
When ordering, please follow the example below:

Inch:	5-21/64", Universal (H^3 series), 130° CPM-M4 = use Part No. **10294-5.3281**
Decimal:	5.4500", Universal (H^3 series), 130° CPM-M4 = use Part No. **10294-5.4500**

Universal Spade Drill Insert Holders

H Series

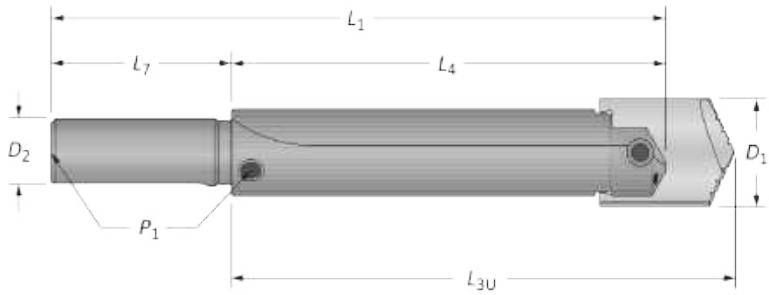

Straight Shank

	Length	D_1	L_{3U}	L_4	L_1	Shank D_2	Shank L_7	Shank P_1	Shank Style	Part No.
ⓘ	Short	4.0000 - 8.5000	8.562	7.000	13.000	2-1/2	6.000	1/2 NPT	#100	**20681-2500**
	Standard	4.0000 - 8.5000	16.562	15.000	21.000	2-1/2	6.000	1/2 NPT	#200	**20881-2500**

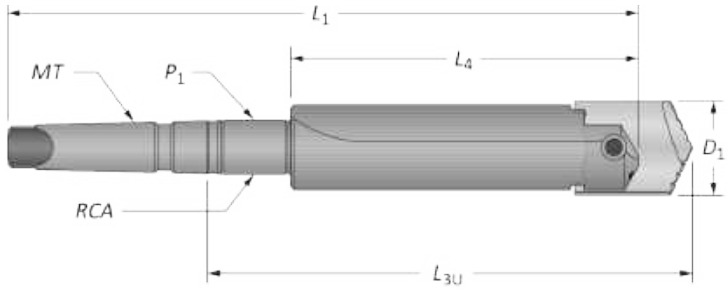

Taper Shank

	Length	D_1	L_{3U}	L_4	L_1	Shank MT	Shank P_1	Shank RCA	Shank Style	Part No.
ⓘ	Short	4.0000 - 8.5000	8.812	7.000	13.125	#5 MT	—	–	#300	**21481-0005**
	Short	4.0000 - 8.5000	11.125	7.000	15.438	#5 MT	1/2 NPT	2T-6SR	#400 SR	**21681-0005**
	Standard	4.0000 - 8.5000	19.125	15.000	23.438	#5 MT	1/2 NPT	2T-6SR	#500 SR	**21881-0005**
	Standard	4.0000 - 8.5000	19.187	15.000	25.875	#6 MT	1/2 NPT	2T-55SR	#500 SR	**21881-0006**
	Long	4.0000 - 8.5000	28.187	24.000	34.875	#6 MT	1/2 NPT	2T-55SR	#600 SR	⚠ **22081-0006**
	XL	4.0000 - 8.5000	44.187	40.000	50.875	#6 MT	1/2 NPT	2T-55SR	#700 SR	⚠ **22281-0006**

Rotary Coolant Adapter (RCA) and Accessories

	ID	OD	L_1	Driving Rod Thread	P_1	Part No.*	RCA O-Rings Kit Part No.**	RCA O-Rings Replacements
ⓘ	2.250	3.750	1.750	1/2" - 13	1/2 NPT	⚠ **2T-6SR**	2T1-6SR	2T1-6OR-10
	2.500	4.000	1.750	1/2" - 13	1/2 NPT	⚠ **2T-55SR**	2T1-55SR	2T1-55OR-10

*RCA comes complete with (1) RCA, (2) O-rings, (2) snap rings, and (2) thrust washers.
**RCA Repair Kit includes (2) O-rings, (2) snap rings, and (2) thrust washers.
⚠ Refer to page A40: 27 for proper RCA assembly and safety information.

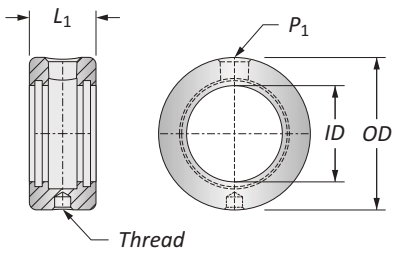

Connection Accessories

Clamping Screw Part No.	Clamping Screw Key	Blade-Loc Screw Part No.	Blade-Loc Screw Key	Pipe Plug Straight Shank Part No.	Pipe Plug Straight Shank Key	Pipe Plug MT Shank (with RCA) Part No.	Pipe Plug MT Shank (with RCA) Key
772312-1	5/8"	**724062-1**	3/16"	**710010-1**	3/8"	**710010-1**	3/8"

A40: 22 - 23

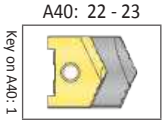

A40: 27

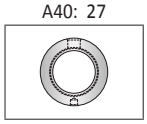

ⓘ = Imperial (in)
ⓜ = Metric (mm)
O-rings sold in packs of 10.

⚠ **WARNING** Refer to Speed and Feed charts for recommended adjustments to speeds and feeds. Refer to page A40: 34 for deep hole drilling guidelines in this section of the catalog. Visit **www.alliedmachine.com/DeepHoleGuidelines** for the most up-to-date information and procedures. Factory technical assistance is available for your specific applications through our Application Engineering Team.

High Performance Spade Drill Insert Adapters

D - H Series

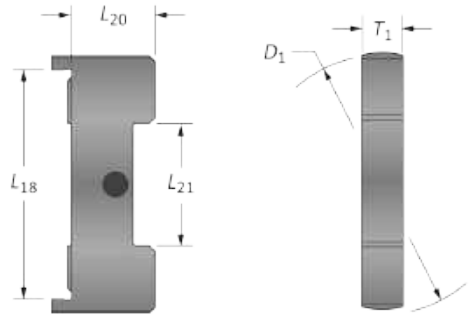

Series	D_1	Adapter L_{18}	L_{20}	L_{21}	T_1	Part No.
D	1.9950	1-3/4	43/64	15/16	3/8	**1024U-Adapter**
E	2.4950	2-1/16	21/32	1-3/16	7/16	**1025U-Adapter**
F	2.9950	2-5/8	23/32	1-1/4	1/2	**1026U-Adapter**
G	3.4950	3-1/16	25/32	1-13/16	5/8	**1027U-Adapter**
H	3.9950	3-1/2	29/32	2-1/4	11/16	**1028U-Adapter**

Step 1:
Position the adapter into the holder.

Step 2:
Slide the insert into the adapter inside the holder.

Step 3:
Insert and tighten both the clamping screw and Blade-Loc screw to secure the insert and adapter into position.

Adapter Interchangeability

- Adapters allow the use of complete spade drill insert range.
- Needed for D - H series (not required for A - C series).
- Adapter + High Performance insert combination can be interchanged with Universal insert and/or other holders.
- Manufactured to ANSI B94.49-1975 TYPE I specifications.

Connection Accessories

Blade-Loc Drill Insert Holders | Pipe Plugs

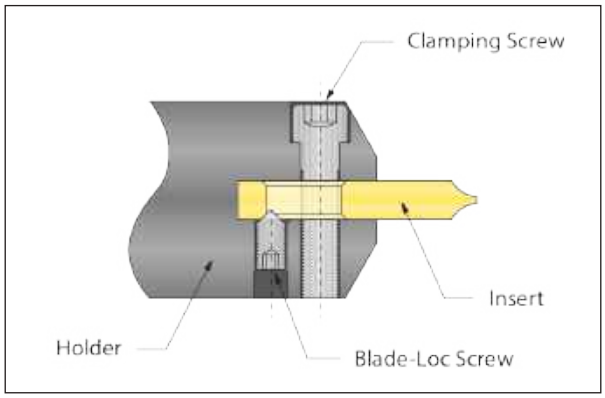

Universal Spade Drill Insert

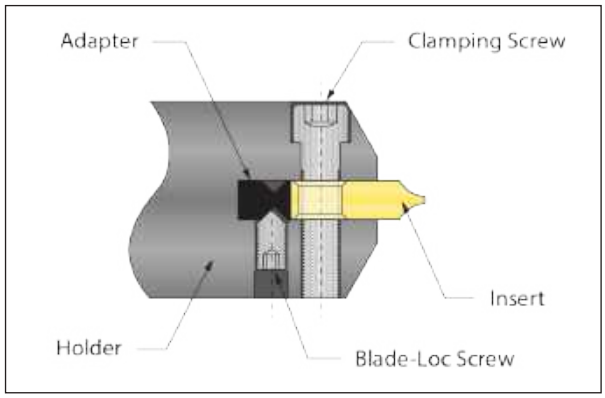

High Performance Spade Drill Insert

Blade-Loc Drill Holders - Universal

- Helps align the spade drill while locking it in place.
- Protects against tool movement during the drilling cycle and when the tool is being retracted from the hole.
- Standard feature in D - H series holders.

Blade-Loc Drill Holders - High Performance

- Secures the adapter to the holder.
- Allows inserts to be exchanged without any need to remove, clean, and reinsert the adapter.

Connection Accessories

	Clamping Screw		Blade-Loc Screw		Pipe Plug			
					Straight Shank		MT Shank (with RCA)	
Series	**Part No.**	**Key**	**Part No.**	**Key**	**Part No.**	**Key**	**Part No.**	**Key**
A	**772074-1**	5/64"	—	—	**710004-1**	5/32"	**710006-1**	7/32"
B	**772098-1**	3/16"	—	—	**710006-1**	7/32"	**710006-1**	7/32"
C	**772100-1**	3/16"	—	—	**710006-1**	7/32"	**710006-1**	7/32"
D	**772160-1**	7/16"	**724050-1**	1/8"	**710006-1**	7/32"	**710006-1**	7/32"
E	**772232-1**	3/8"	**724050-1**	1/8"	**710010-1**	3/8"	**710010-1**	3/8"
F	**772272-1**	7/16"	**724050-1**	1/8"	**710010-1**	3/8"	**710010-1**	3/8"
G	**772312-1**	5/8"	**724050-1**	1/8"	**710010-1**	3/8"	**710010-1**	3/8"
H	**772312-1**	5/8"	**724062-1**	3/16"	**710010-1**	3/8"	**710010-1**	3/8"

Rotary Coolant Adapters (RCA)

Morse Taper Shanks

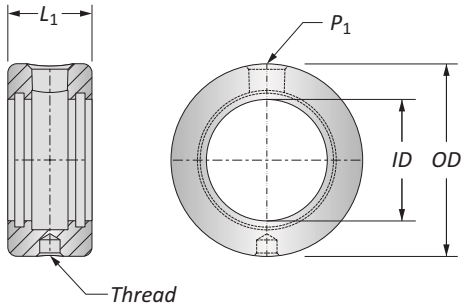

	Holder Series	*ID*	*OD*	L_1	Driving Rod Thread	P_1	Part No.*	Max Recommended RPM	RCA O-Rings Kit Part No.**	RCA O-Rings Replacements
i	A, B, C, D	1.250	2.500	1.375	3/8" - 16	1/4 NPT	⚠ **2T-4SR**	2000	2T1-4SR	2T1-4OR-10
	B, C, D	1.750	3.000	1.375	3/8" - 16	1/4 NPT	⚠ **2T-5SR**	1500	2T1-5SR	2T1-5OR-10
	E, F, G, H	2.250	3.750	1.750	1/2" - 13	1/2 NPT	⚠ **2T-6SR**	1100	2T1-6SR	2T1-6OR-10
	H	2.500	4.000	1.750	1/2" - 13	1/2 NPT	⚠ **2T-55SR**	1100	2T1-55SR	2T1-55OR-10

*RCA comes complete with (1) RCA, (2) O-rings, (2) snap rings, and (2) thrust washers.
**RCA Repair Kit includes (2) O-rings, (2) snap rings, and (2) thrust washers.
NOTE: Max recommended pressure is 600 PSI (42 bar).
NOTE: Recommendations above are based on water and oil based coolants.

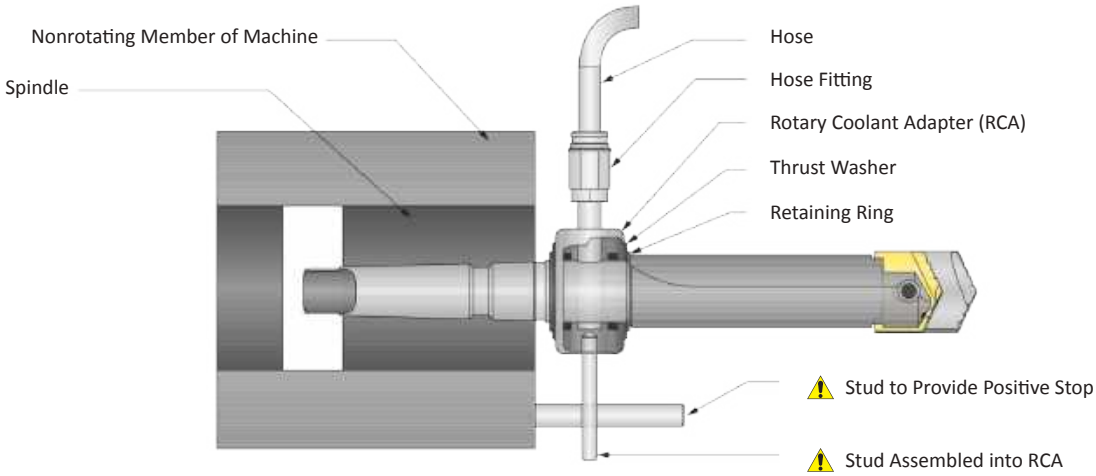

i = Imperial (in)
m = Metric (mm)
O-rings sold in packs of 10.

⚠ WARNING RCA rotation during drilling can cause hose and/or hose fitting failure, machinery damage, and/or serious injury. To prevent, use RCA and positive stop studs when drilling. Factory technical assistance is also available for your specific applications.

Regrind Charts

Universal Inserts

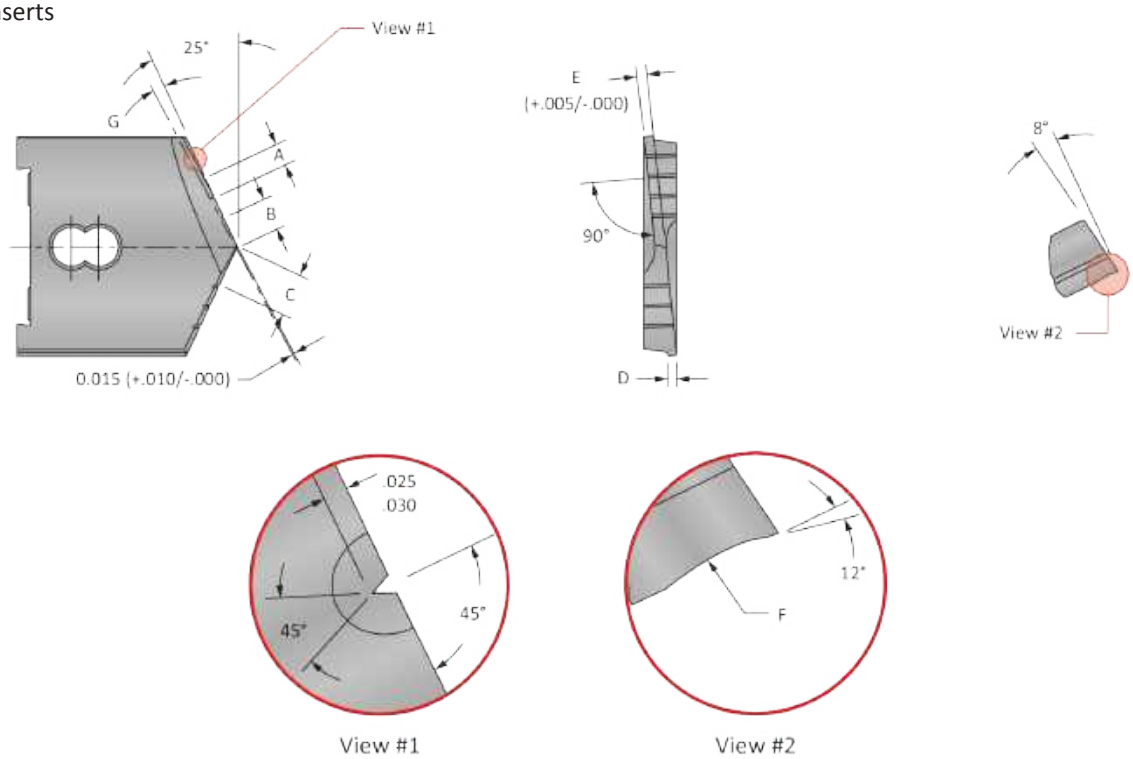

Universal (130°) Spade Drill Inserts

Series	Insert Thickness	Size Range	A	B	C	D	E	F	G
AA	1/4	1 - 1-/3/8	0.125	0.156	0.218	0.065	0.070	1/4	3°
A	3/16	31/32 - 1-3/8	0.125	0.156	0.218	0.065	0.065	1/4	3°
B	9/32	1-1/4 - 1-3/4	0.150	0.250	0.325	0.070	0.090	5/16	3°
C	5/16	1-1/2 - 2-3/8	0.200	0.250	0.350	0.080	0.100	5/16	3°
D	3/8	2 - 2-7/8	0.250	0.375	0.500	0.100	0.120	3/8	3°
E	7/16	2-1/2 - 3-3/8	0.300	0.437	0.587	0.100	0.140	3/8	3°
F	1/2	3 - 3-7/8	0.350	0.437	0.612	0.125	0.170	3/8	3°
G	5/8	3-1/2 - 4-1/2	0.350	0.500	0.675	0.140	0.200	3/8	3°
H^1 - H^2	11/16	4 - 5	0.400	0.500	0.700	0.165	0.225	1/2	3°
H^3	11/16	5-1/8 - 5-1/2	0.500	0.500	0.750	0.185	0.250	1/2	3°
H^4 - H^9	11/16	5-5/8 - 8-1/2	0.500	0.500	0.750	0.185	0.250	1/2	2°

NOTE: Maintain cutting edges of the tool within 0.001" T.I.R.

High Performance Regrinds: High Performance inserts should be reground and coated by Allied Machine before returning them to production. The real economy of High Performance spade inserts is their improved production rates (100% and 500%) and increased tool life (3 to 20 times). Factory regrinding and coating provides like-new tool performance. Our factory service reduces your total cost per hole.

Regrind Charts

Universal Inserts

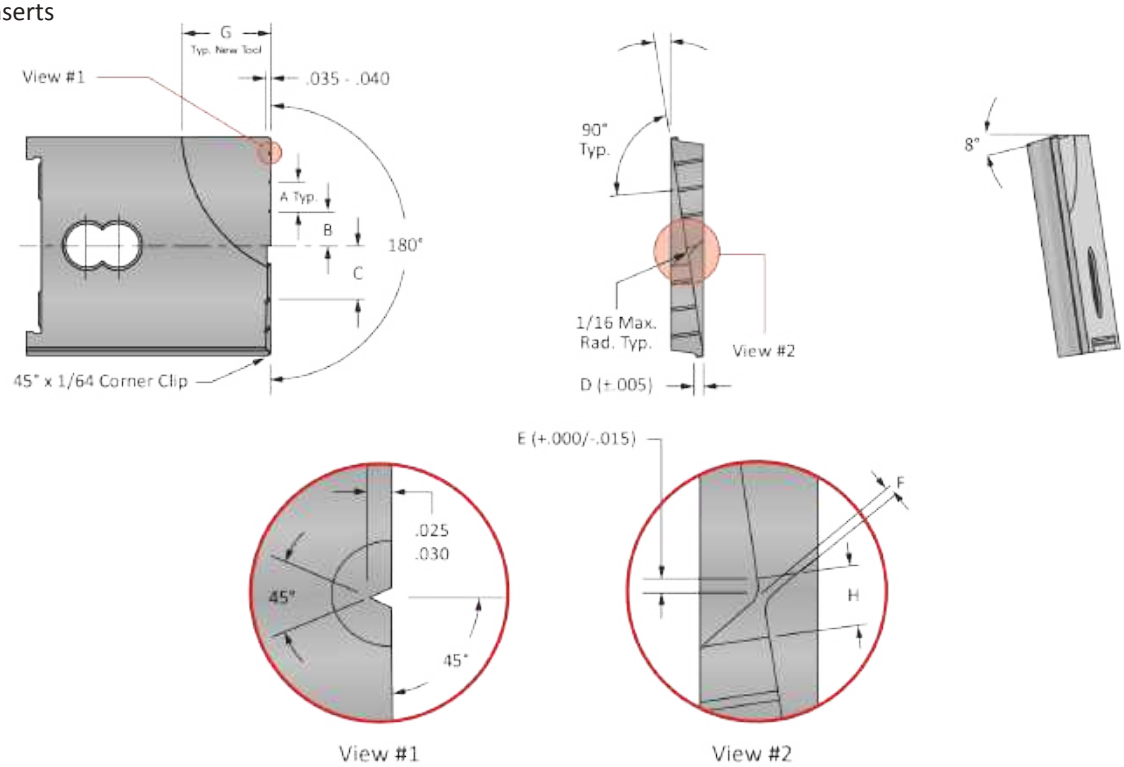

Flat Bottom Spade Drill Inserts

Series	Insert Thickness	Size Range	A	B	C	D	E	F	G	H
AA	1/4	1 - 1-/3/8	0.150	0.250	0.325	0.065	1/64 - 1/32	0.075	7/16	1/8
A	3/16	31/32 - 1-3/8	0.150	0.250	0.325	0.065	1/64 - 1/32	0.075	7/16	1/8
B	9/32	1-1/4 - 1-3/4	0.200	0.250	0.350	0.070	1/64 - 1/32	0.075	1/2	1/8
C	5/16	1-1/2 - 2-3/8	0.200	0.250	0.350	0.080	1/32 - 3/64	0.075	5/8	1/8
D	3/8	2 - 2-7/8	0.300	0.375	0.525	0.100	1/32 - 3/64	0.129	7/8	3/16
E	7/16	2-1/2 - 3-3/8	0.300	0.375	0.525	0.100	1/32 - 1/16	0.129	1-1/8	3/16
F	1/2	3 - 3-7/8	0.300	0.500	0.650	0.125	1/32 - 1/16	0.156	1-1/4	1/4
G	5/8	3-1/2 - 4-1/2	0.400	0.500	0.700	0.140	1/32 - 1/16	0.156	1-1/2	1/4
H^1 - H^2	11/16	4 - 5	0.500	0.500	0.750	0.165	1/32 - 1/16	0.156	1-1/2	1/4

NOTE: Grind cutting edge 0.005" above center line at the center of the new tool
NOTE: Maintain flatness and height across the cutting edges of the tool within 0.001" T.I.R.

Recommended Cutting Data | Imperial (inch)

High Performance Spade Inserts

ISO	Material	Hardness (BHN)	TiN SFM	TiAlN SFM	TiCN SFM	Feed Rate (IPR) by Diameter 1" - 1-1/4"	1-1/4" - 2"	2" - 3"	3" - 5"
P	**Free-Machining Steel** 1118, 1215, 12L14, etc.	100 - 150	200	280	260	0.016	0.020	0.023	0.028
		150 - 200	180	260	235	0.016	0.020	0.023	0.028
		200 - 250	160	240	210	0.016	0.020	0.023	0.028
	Low-Carbon Steel 1010, 1020, 1025, 1522, 1144, etc.	85 - 125	170	250	220	0.015	0.019	0.023	0.027
		125 - 175	160	240	210	0.015	0.019	0.023	0.027
		175 - 225	150	225	195	0.014	0.018	0.021	0.024
		225 - 275	140	210	180	0.014	0.018	0.021	0.024
	Medium-Carbon Steel 1030, 1040, 1050, 1527, 1140, 1151, etc.	125 - 175	160	240	210	0.015	0.019	0.023	0.027
		175 - 225	150	225	195	0.014	0.018	0.021	0.024
		225 - 275	140	210	180	0.014	0.018	0.021	0.024
		275 - 325	130	195	170	0.012	0.016	0.019	0.022
	Alloy Steel 4140, 5140, 8640, etc.	125 - 175	150	210	195	0.014	0.017	0.019	0.022
		175 - 225	140	195	180	0.014	0.017	0.019	0.022
		225 - 275	130	180	170	0.014	0.017	0.019	0.022
		275 - 325	120	170	155	0.012	0.015	0.017	0.020
		325 - 375	110	155	145	0.012	0.015	0.017	0.020
	High-Strength Alloy 4340, 4330V, 300M, etc.	225 - 300	80	110	100	0.010	0.014	0.017	0.020
		300 - 350	60	85	80	0.010	0.014	0.017	0.020
		350 - 400	50	70	65	0.009	0.012	0.015	0.018
	Structural Steel A36, A285, A516, etc.	100 - 150	140	200	180	0.014	0.018	0.021	0.026
		150 - 250	120	170	155	0.012	0.016	0.019	0.024
		250 - 350	100	140	130	0.010	0.014	0.017	0.020
	Tool Steel H-13, H-21, A-4, 0-2, S-3, etc.	150 - 200	80	110	105	0.010	0.012	0.015	0.017
		200 - 250	60	90	85	0.010	0.012	0.015	0.017
S	**High-Temp Alloy** Hastelloy B, Inconel 600, etc.	140 - 220	30	40	35	0.010	0.012	0.015	–
		220 - 310	25	35	30	0.008	0.010	0.012	–
M	**Stainless Steel** 303, 416, 420, 17-4 PH, etc.	135 - 185	75	105	95	0.011	0.014	0.016	0.020
		185 - 275	60	90	80	0.010	0.012	0.014	0.018
K	**Cast Iron**	120 - 150	170	250	220	0.020	0.024	0.027	0.030
		150 - 200	150	225	195	0.018	0.022	0.025	0.028
		200 - 220	130	195	170	0.016	0.018	0.021	0.024
		220 - 260	110	165	145	0.012	0.014	0.017	0.020
		260 - 320	90	135	120	0.009	0.012	0.014	0.016
N	**Aluminum**	30	600	850	750	0.020	0.022	0.025	0.025
		180	300	450	400	0.018	0.022	0.025	0.025

Deep Hole Drilling Speed and Feed Adjustment

	⚠ Holder Length	
	Long	XL
Speed	0.90	0.80
Feed	–	0.90

Recommended Speed and Feed Example

If the recommended speed and feed is 200 SFM and 0.016 IPR for a standard length holder, then the speed and feed using an XL holder in the same application would be 160 SFM and 0.014 IPR.

200 • 0.80 = 160 SFM	0.016 • 0.90 = 0.014 IPR

⚠ **WARNING** **Tool failure can cause serious injury. To prevent:**
- When using holders without support bushing, use a short length holder to establish an initial hole that is a minimum of 2 diameters deep.
- Do not rotate tool holders more than 50 RPM unless it is engaged with the workpiece or fixture.

Refer to page A40: 34 for Deep Hole Drilling Guidelines. Visit **www.alliedmachine.com/DeepHoleGuidelines** for the most up-to-date information and procedures. Factory technical assistance is available for your specific applications through our Application Engineering Team.

IMPORTANT: The speeds and feeds listed above are a general starting point for all applications. Refer to the Coolant Recommendation chart for coolant requirements to run at the recommended speeds and feeds. Factory technical assistance is available through our Application Engineering department. See adjustment examples on the following page.

Coolant Recommendations | Imperial (inch)

High Performance Spade Inserts

ISO	Material	Data Metrics	Data by Diameter 1" - 1-1/4"	1-1/4" - 2"	2" - 3"	3" - 5"
P	**Free-Machining Steel** 1118, 1215, 12L14, etc.	Hardness (BHN)	100 - 250	100 - 250	100 - 250	100 - 250
		Coolant Pressure (PSI)	105 - 150	55 - 75	45 - 60	35 - 45
		Coolant Volumetric Flow Rate (GPM)	6.3 - 7.6	15 - 18	31 - 36	47 - 53
	Low-Carbon Steel	Hardness (BHN)	85 - 275	85 - 275	85 - 275	85 - 275
		Coolant Pressure (PSI)	80 - 115	45 - 55	35 - 45	30 - 35
		Coolant Volumetric Flow Rate (GPM)	5.5 - 6.6	14 - 15	28 - 31	43 - 46
	Medium-Carbon Steel	Hardness (BHN)	125 - 325	125 - 325	125 - 325	125 - 325
		Coolant Pressure (PSI)	70 - 100	40 - 50	35 - 40	30 - 35
		Coolant Volumetric Flow Rate (GPM)	5.2 - 6.2	13 - 15	28 - 30	43 - 46
	Alloy Steel	Hardness (BHN)	125 - 375	125 - 375	125 - 375	125 - 375
		Coolant Pressure (PSI)	60 - 85	30 - 40	30 - 35	25 - 30
		Coolant Volumetric Flow Rate (GPM)	4.8 - 5.7	11 - 13	26 - 28	39 - 43
	High-Strength Alloy 4340, 4330V, 300M, etc.	Hardness (BHN)	225 - 400	225 - 400	225 - 400	225 - 400
		Coolant Pressure (PSI)	25 - 30	20 - 25	20 - 25	20 - 25
		Coolant Volumetric Flow Rate (GPM)	3.1 - 3.4	9 - 10	21 - 23	35 - 39
	Structural Steel A36, A285, A516, etc.	Hardness (BHN)	100 - 350	100 - 350	100 - 350	100 - 350
		Coolant Pressure (PSI)	50 - 70	30 - 35	25 - 30	25 - 30
		Coolant Volumetric Flow Rate (GPM)	4.4 - 5.2	11 - 12	23 - 26	39 - 43
	Tool Steel H-13, H-21, A-4, 0-2, S-3, etc.	Hardness (BHN)	150 - 250	150 - 250	150 - 250	150 - 250
		Coolant Pressure (PSI)	25 - 30	20 - 25	20 - 25	20 - 25
		Coolant Volumetric Flow Rate (GPM)	3.1 - 3.4	9 - 10	21 - 23	35 - 43
S	**High-Temp Alloy** Hastelloy B, Inconel 600, etc.	Hardness (BHN)	140 - 310	140 - 310	140 - 310	140 - 310
		Coolant Pressure (PSI)	35 - 40	25 - 30	25 - 30	–
		Coolant Volumetric Flow Rate (GPM)	3.6 - 3.9	10 - 11	23 - 26	–
M	**Stainless Steel** 303, 416, 420, 17-4 PH, etc.	Hardness (BHN)	135 - 275	135 - 275	135 - 275	135 - 275
		Coolant Pressure (PSI)	50 - 65	30 - 35	25 - 30	25 - 30
		Coolant Volumetric Flow Rate (GPM)	4.4 - 5.0	11 - 12	23 - 26	39 - 43
K	**Cast Iron**	Hardness (BHN)	120 - 320	120 - 320	120 - 320	120 - 320
		Coolant Pressure (PSI)	40 - 50	25 - 30	25 - 30	20 - 25
		Coolant Volumetric Flow Rate (GPM)	3.9 - 4.4	10 - 11	23 - 26	35 - 43
N	**Aluminum**	Hardness (BHN)	30 - 180	30 - 180	30 - 180	30 - 180
		Coolant Pressure (PSI)	150 - 220	80 - 115	60 - 80	55 - 70
		Coolant Volumetric Flow Rate (GPM)	7.6 - 9.1	19 - 22	36 - 42	59 - 66

Deep Hole Drilling Speed and Feed Adjustment

	⚠ Holder Length	
	Long	XL
Pressure and Flow	1.3	2

Recommended Speed and Feed Example

If the recommended pressure and flow is 150 PSI and 6.3 GPM for a standard length holder, then the adjusted pressure and flow using an XL holder in the same application would be 300 PSI and 12.6 GPM.

150 • 2 = 300 PSI	6.3 • 2 = 12.6 GPM

⚠ **WARNING** **Tool failure can cause serious injury. To prevent:**
- When using holders without support bushing, use a short length holder to establish an initial hole that is a minimum of 2 diameters deep.
- Do not rotate tool holders more than 50 RPM unless it is engaged with the workpiece or fixture.

Refer to page A40: 34 for Deep Hole Drilling Guidelines. Visit **www.alliedmachine.com/DeepHoleGuidelines** for the most up-to-date information and procedures. Factory technical assistance is available for your specific applications through our Application Engineering Team.

IMPORTANT: The coolant pressure and flow rate recommendation below represents a good approximation to obtain optimum tool life and chip evacuation at the recommended speeds and feeds. If lower coolant capabilities exist in a drilling application, the HP/Universal drilling system will still function at reduced penetration rates. Contact our Application Engineering department for more specific recommendations of coolant requirements and/or speeds and feeds.

Recommended Cutting Data | Imperial (inch)

Universal Spade Inserts

ISO	Material	Hardness (BHN)	SFM	Feed Rate (IPR) by Diameter 1" - 1-1/4"	1-1/4" - 2"	2" - 3"	3" - 5"
P	**Free-Machining Steel** 1118, 1215, 12L14, etc.	100 - 150	100	0.014	0.016	0.020	0.024
		150 - 200	90	0.013	0.015	0.019	0.022
		200 - 250	80	0.012	0.014	0.018	0.020
	Low-Carbon Steel 1010, 1020, 1025, 1522, 1144, etc.	85 - 125	80	0.012	0.015	0.018	0.020
		125 - 175	75	0.012	0.014	0.017	0.020
		175 - 225	60	0.010	0.014	0.016	0.018
		225 - 275	55	0.010	0.013	0.016	0.018
	Medium-Carbon Steel 1030, 1040, 1050, 1527, 1140, 1151, etc.	125 - 175	65	0.010	0.014	0.018	0.020
		175 - 225	60	0.010	0.014	0.016	0.020
		225 - 275	50	0.008	0.013	0.016	0.018
		275 - 325	45	0.008	0.012	0.014	0.016
	Alloy Steel 4140, 5140, 8640, etc.	125 - 175	60	0.010	0.014	0.018	0.020
		175 - 225	55	0.010	0.014	0.016	0.020
		225 - 275	45	0.008	0.013	0.016	0.018
		275 - 325	35	0.008	0.012	0.014	0.016
		325 - 375	30	0.008	0.012	0.014	0.016
	High-Strength Alloy 4340, 4330V, 300M, etc.	225 - 300	40	0.008	0.012	0.014	0.016
		300 - 350	30	0.006	0.010	0.014	0.016
		350 - 400	25	0.006	0.008	0.014	0.016
	Structural Steel A36, A285, A516, etc.	100 - 150	70	0.012	0.016	0.018	0.020
		150 - 250	60	0.010	0.014	0.016	0.018
		250 - 350	50	0.008	0.012	0.014	0.016
	Tool Steel H-13, H-21, A-4, 0-2, S-3, etc.	150 - 200	50	0.009	0.011	0.014	0.016
		200 - 250	40	0.008	0.010	0.013	0.015
S	**High-Temp Alloy** Hastelloy B, Inconel 600, etc.	140 - 220	20	0.008	0.010	0.012	–
		220 - 310	15	0.007	0.009	0.011	–
M	**Stainless Steel** 303, 416, 420, 17-4 PH, etc.	135 - 185	45	0.008	0.012	0.015	0.018
		185 - 275	35	0.007	0.010	0.013	0.016
K	**Cast Iron**	120 - 150	100	0.016	0.020	0.022	0.025
		150 - 200	80	0.015	0.018	0.020	0.022
		200 - 220	70	0.011	0.014	0.018	0.020
		220 - 260	60	0.008	0.012	0.015	0.017
		260 - 320	45	0.008	0.010	0.012	0.014
N	**Aluminum**	30	275	0.018	0.026	0.032	0.042
		180	200	0.018	0.026	0.032	0.042

Deep Hole Drilling Speed and Feed Adjustment

	⚠ Holder Length	
	Long	XL
Speed	0.90	0.80
Feed	–	0.90

Recommended Speed and Feed Example

If the recommended speed and feed is 100 SFM and 0.016 IPR for a standard length holder, then the speed and feed using an XL holder in the same application would be 80 SFM and 0.014 IPR.

100 • 0.80 = 80 SFM	0.016 • 0.90 = 0.014 IPR

⚠ **WARNING** **Tool failure can cause serious injury. To prevent:**
- When using holders without support bushing, use a short length holder to establish an initial hole that is a minimum of 2 diameters deep.
- Do not rotate tool holders more than 50 RPM unless it is engaged with the workpiece or fixture.

Refer to page A40: 34 for Deep Hole Drilling Guidelines. Visit **www.alliedmachine.com/DeepHoleGuidelines** for the most up-to-date information and procedures. Factory technical assistance is available for your specific applications through our Application Engineering Team.

IMPORTANT: The speeds and feeds listed above are a general starting point for all applications. Refer to the Coolant Recommendation chart for coolant requirements to run at the recommended speeds and feeds. Factory technical assistance is available through our Application Engineering department. See adjustment examples on the following page.

Coolant Recommendations | Imperial (inch)

Universal Spade Inserts

ISO	Material	Data Metrics	Data by Diameter 1" - 1-1/4"	1-1/4" - 2"	2" - 3"	3" - 5"
P	**Free-Machining Steel** 1118, 1215, 12L14, etc.	Hardness (BHN)	100 - 250	100 - 250	100 - 250	100 - 250
		Coolant Pressure (PSI)	40	25	25	20
		Coolant Volumetric Flow Rate (GPM)	3.9	10	23	35
	Low-Carbon Steel	Hardness (BHN)	85 - 275	85 - 275	85 - 275	85 - 275
		Coolant Pressure (PSI)	30	20	20	20
		Coolant Volumetric Flow Rate (GPM)	3.4	9	21	35
	Medium-Carbon Steel	Hardness (BHN)	125 - 325	125 - 325	125 - 325	125 - 325
		Coolant Pressure (PSI)	25	20	20	20
		Coolant Volumetric Flow Rate (GPM)	3.1	9	21	35
	Alloy Steel	Hardness (BHN)	125 - 375	125 - 375	125 - 375	125 - 375
		Coolant Pressure (PSI)	20	20	20	20
		Coolant Volumetric Flow Rate (GPM)	2.8	9	21	35
	High-Strength Alloy 4340, 4330V, 300M, etc.	Hardness (BHN)	225 - 400	225 - 400	225 - 400	225 - 400
		Coolant Pressure (PSI)	25	20	20	20
		Coolant Volumetric Flow Rate (GPM)	3.1	9	21	35
	Structural Steel A36, A285, A516, etc.	Hardness (BHN)	100 - 350	100 - 350	100 - 350	100 - 350
		Coolant Pressure (PSI)	25	20	20	20
		Coolant Volumetric Flow Rate (GPM)	3.1	9	21	35
	Tool Steel H-13, H-21, A-4, 0-2, S-3, etc.	Hardness (BHN)	150 - 250	150 - 250	150 - 250	150 - 250
		Coolant Pressure (PSI)	25	20	20	20
		Coolant Volumetric Flow Rate (GPM)	3.1	9	21	35
S	**High-Temp Alloy** Hastelloy B, Inconel 600, etc.	Hardness (BHN)	140 - 310	140 - 310	140 - 310	140 - 310
		Coolant Pressure (PSI)	25	20	20	20
		Coolant Volumetric Flow Rate (GPM)	3.1	9	21	35
M	**Stainless Steel** 303, 416, 420, 17-4 PH, etc.	Hardness (BHN)	135 - 275	135 - 275	135 - 275	135 - 275
		Coolant Pressure (PSI)	25	25	20	20
		Coolant Volumetric Flow Rate (GPM)	3.1	10	21	35
K	**Cast Iron**	Hardness (BHN)	120 - 320	120 - 320	120 - 320	120 - 320
		Coolant Pressure (PSI)	25	20	20	20
		Coolant Volumetric Flow Rate (GPM)	3.1	9	21	35
N	**Aluminum**	Hardness (BHN)	30 - 180	30 - 180	30 - 180	30 - 180
		Coolant Pressure (PSI)	55	35	30	30
		Coolant Volumetric Flow Rate (GPM)	4.6	12	26	40

Deep Hole Drilling Speed and Feed Adjustment

	⚠ Holder Length	
	Long	XL
Pressure and Flow	1.3	2

Recommended Speed and Feed Example

If the recommended pressure and flow is 150 PSI and 6.3 GPM for a standard length holder, then the adjusted pressure and flow using an XL holder in the same application would be 300 PSI and 12.6 GPM.

150 • 2 = 300 PSI	6.3 • 2 = 12.6 GPM

⚠ **WARNING** **Tool failure can cause serious injury. To prevent:**
- When using holders without support bushing, use a short length holder to establish an initial hole that is a minimum of 2 diameters deep.
- Do not rotate tool holders more than 50 RPM unless it is engaged with the workpiece or fixture.

Refer to page A40: 34 for Deep Hole Drilling Guidelines. Visit **www.alliedmachine.com/DeepHoleGuidelines** for the most up-to-date information and procedures. Factory technical assistance is available for your specific applications through our Application Engineering Team.

IMPORTANT: The coolant pressure and flow rate recommendation below represents a good approximation to obtain optimum tool life and chip evacuation at the recommended speeds and feeds. If lower coolant capabilities exist in a drilling application, the HP/Universal drilling system will still function at reduced penetration rates. Contact our Application Engineering department for more specific recommendations of coolant requirements and/or speeds and feeds.

Deep Hole Drilling Guidelines

1. Pilot Hole
100% RPM
100% IPR (mm/rev)

Establish the pilot hole using the same diameter short drill to a depth of 2xD minimum.
Utilize a pilot drill with the same or larger included point angle.

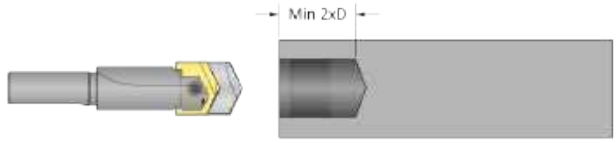

Coolant ON

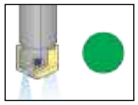

2. Feed-in
50 RPM max
12 IPM (300 mm/min)

Feed the longer drill within 1/16" (1.5 mm) short of the established pilot hole bottom at a **maximum of 50 RPM** and 12 IPM (300 mm/min) feed rate.

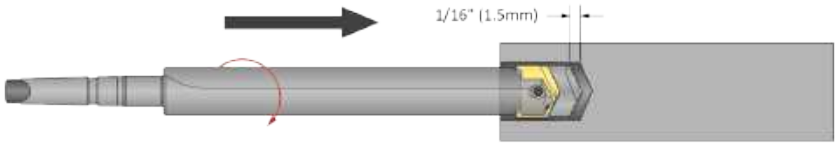

Coolant OFF

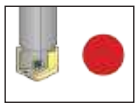

3. Deep Hole Transition Drilling
50% RPM
75% IPR (mm/rev)

Drill additional 1xD past the bottom of the pilot hole at 50% reduction of recommended speed and 25% reduction of recommended feed.
Minimum of 1 second dwell is required to meet full speed before feeding.

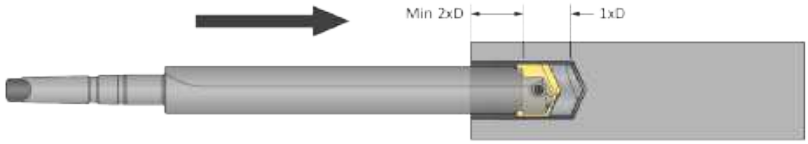

Coolant ON

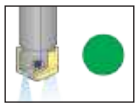

4. Deep Hole Drilling - Blind
100% RPM
100% IPR (mm/rev)

Drill to full depth at recommended speed and feed for longer drill according to Allied speed and feed charts.
No peck cycle recommended.

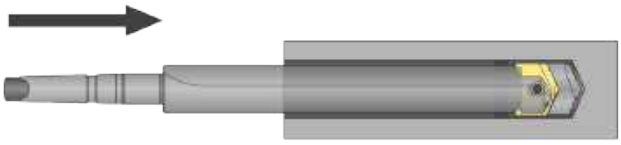

Coolant ON

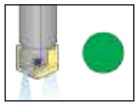

5. Deep Hole Drilling - at Breakout
50% RPM
75% IPR (mm/rev)

For through holes only:
Reduce speed by 50% and feed by 25% prior to breakout.
Do not break out more than 1/8" (3 mm) past the full diameter of the drill.

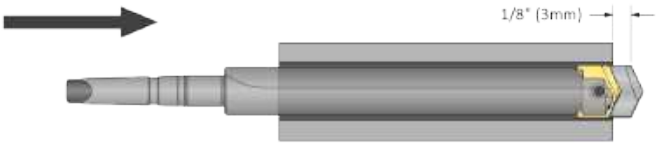

Coolant ON

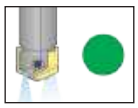

6. Drill Retract
50 RPM max

Reduce speed to a **maximum of 50 RPM** before retracting from the hole.

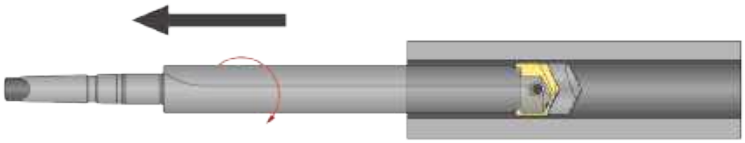

Coolant OFF

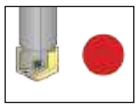

⚠ WARNING **Tool failure can cause serious injury. To prevent:**
- When using holders without support bushing, use a short length holder to establish an initial hole that is a minimum of 2 diameters deep.
- Do not rotate tool holders more than 50 RPM unless it is engaged with the workpiece or fixture.

Visit **www.alliedmachine.com/DeepHoleGuidelines** for the most up-to-date information and procedures. Factory technical assistance is available for your specific applications through our Application Engineering Team.

Notes

Guaranteed Test / Demo Application Form

Distributor PO #	

The following must be filled out completely before your test will be considered.

IMPORTANT: For processing, send purchase order to your Allied Field Sales Engineer (FSE). Please clearly mark the paperwork as "Test Order."

Distributor Information

Company Name: _____

Contact: _____

Account Number: _____

Phone: _____

Email: _____

End User Information

Company Name: _____

Contact: _____

Industry: _____

Phone: _____

Email: _____

Current Process

List all tooling, coatings, substrates, speeds and feeds, tool life, and any problems you are experiencing.

_____

_____

Test Objective

List what would make this a successful test (i.e. penetration rate, finish, tool life, hole size, etc.).

_____

_____

Application Information

Hole Diameter: _____ in/mm

Tolerance: _____

Material: _____ (4150, A36, cast iron, etc.)

Preexisting Diameter: _____ in/mm

Depth of Cut: _____ in/mm

Hardness: _____ (BHN, Rc)

Required Finish: _____ RMS

State: _____ (Casting, hot rolled, forging)

Machine Information

Machine Type: _____ (Lathe, screw machine, machine center, etc.)

Builder: _____ (Haas, Mori Seiki, etc.)

Model #: _____

Shank Required: _____ (CAT50, Morse taper, etc.)

Power: _____ HP/KW

Thrust: _____ lbs/N

Rigidity:
- ☐ Excellent
- ☐ Good
- ☐ Poor

Orientation:
- ☐ Vertical
- ☐ Horizontal

Tool Rotating:
- ☐ Yes
- ☐ No

Coolant Information

Coolant Delivery: _____ (Through tool, flood)

Coolant Pressure: _____ PSI / bar

Coolant Type: _____ (Air mist, oil, synthetic, water soluble, etc.)

Coolant Volume: _____ GPM / LPM

Requested Tooling

QTY	Item Number

QTY	Item Number

ALLIED MACHINE & ENGINEERING

Allied Machine & Engineering
120 Deeds Drive
Dover, OH 44622

Telephone: (330) 343-4283
Toll Free USA & Canada: (800) 321-5537
Email: info@alliedmachine.com

ALLIED MACHINE & ENGINEERING

Warranty Information

Allied Machine & Engineering ("Allied Machine") warrants to original equipment manufacturers, distributors, industrial and commercial users of its products for one year from the original date of sale that each new product manufactured or supplied by Allied Machine shall be free from defects in material and workmanship.

Allied Machine's sole and exclusive obligation under this warranty is limited to, at its option, without additional charge, replacing or repairing this product or issuing a credit. For this warranty to be applied, the product must be returned freight prepaid to the plant designated by an Allied Machine representative and which, upon inspection, is determined by Allied Machine to be defective in material and workmanship.

Complete information as to operating conditions, machine, setup, and the application of cutting fluid should accompany any product returned for inspection. This warranty shall not apply to any Allied Machine products which have been subjected to misuse, abuse, improper operating conditions, improper machine setup or improper application of cutting fluid or which have been repaired or altered if such repair or alteration, in the judgement of Allied Machine, would adversely affect the performance of the product.

THIS WARRANTY IS IN LIEU OF ALL OTHER WARRANTIES, EXPRESS OR IMPLIED, INCLUDING ANY IMPLIED WARRANTY OF MERCHANTABILITY OR FITNESS FOR A PARTICULAR PURPOSE. Allied Machine shall have no liability or responsibility for any claim, whether in contract, tort or otherwise, for any loss or damage arising out of, connected with, or resulting from the manufacture, sale, delivery or use of any product sold hereunder, in excess of the cost of replacement or repair as provided herein.

Allied Machine shall not be liable in contract or in tort (including, without limitation, negligence, strict liability or otherwise) for economic losses of any kind or for any special, incidental, indirect, consequential, punitive or exemplary damages arising in any way out of the performance of, or failure to perform this agreement.

ALL PRICES, DELIVERIES, DESIGNS, AND MATERIALS ARE SUBJECT TO CHANGE WITHOUT NOTICE.

Allied Machine & Engineering is registered to ISO 9001:2015 by DQS.

Wohlhaupter GmbH is registered to ISO 9001:2015 by QUACERT.

Allied Machine & Engineering Co. Europe Ltd. is registered to ISO 9001:2015 by bsi.

United States

Allied Machine & Engineering
120 Deeds Drive
Dover OH 44622
United States

Phone:
+1.330.343.4283

Toll Free USA and Canada:
800.321.5537

Toll Free USA and Canada:
800.223.5140

Allied Machine & Engineering
485 W Third Street
Dover OH 44622
United States

Phone:
+1.330.343.4283

Toll Free USA and Canada:
800.321.5537

Europe

Allied Machine & Engineering Co. (Europe) Ltd
93 Vantage Point
Pensnett Estate
Kingswinford
West Midlands
DY6 7FR England

Phone:
+44 (0) 1384 400 900

Wohlhaupter® GmbH
Maybachstrasse 4
Postfach 1264
72636 Frickenhausen
Germany

Phone:
+49 (0) 7022 408-0

Asia

Wohlhaupter® India Pvt. Ltd.
B-23, 3rd Floor
B Block Community Centre
Janakpuri, New Delhi - 110058
India

Phone:
+91 (0) 11.41827044

Your local Allied Machine representative:

www.alliedmachine.com

Allied Machine & Engineering is registered to **ISO 9001:2015** by DQS.
Wohlhaupter GmbH is registered to **ISO 9001:2015** by QUACERT.
Allied Machine & Engineering Co. (Europe) Ltd is registered to **ISO 9001:2015** by bsi.

ALLIED MACHINE & ENGINEERING

Copyright © 2025 Allied Machine and Engineering Corp. – All rights reserved.
All trademarks designated with the ® symbol are registered in the United States and other countries.
Available Online Only: A40-HPU
Publish Date: June 2025