ALLIED MACHINE & ENGINEERING

Holemaking Solutions for Today's Manufacturing

Boring

Reaming

Burnishing

Threading

APX™ Drill

▶ *DRILLING*

Deep Hole / Large Diameter Drilling System

Specials

SECTION

A50

APX™ Drill

APX™ Drill

Deep Hole / Large Diameter Drilling System

- **Diameter Range:** 1.299" - 4.000" (33.00 mm - 101.60 mm)

Don’t Let Your Machine Slow You Down

The APX deep hole/large diameter drilling system delivers the strength and versatility needed for any deep hole drilling application. The breakthrough geometry is designed to increase penetration rates and tool life. By allowing for higher spindle speeds, the APX lets you take advantage of the power curve on modern CNC machines.

Excellent chip control.	Improves hole quality and surface finish.	Provides maximum durability and stability.

Applicable Industries

Aerospace · Agriculture · Automotive · Firearms · General Machining · Oil & Gas · Renewable Energy

Your safety and the safety of others is very important. This catalog contains important safety messages. Always read and follow all safety precautions.

This triangle is a safety hazard symbol. It alerts you to potential safety hazards that can cause tool failure and serious injury.

When you see this symbol in the catalog, look for a related safety message that may be near this triangle or referred to in the nearby text.

There are safety signal words also used in the catalog. Safety messages follow these words.

WARNING

WARNING (shown above) means that failure to follow the precautions in this message could result in tool failure and serious injury.

NOTICE means that failure to follow the precautions in this message could result in damage to the tool or machine but not result in personal injury.

NOTE and **IMPORTANT** are also used. These are important that you read and follow but are not safety-related.

Visit www.alliedmachine.com for the most up-to-date information and procedures.

Reference Icons
The following icons will appear throughout the catalog to help you navigate between products.

Setup / Assembly Information
Detailed instructions and information regarding the corresponding part(s)

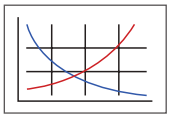

Recommended Cutting Data
Speed and feed recommendations for optimum and safe drilling

GEN3SYS® Pilot Inserts
Lists the GEN3SYS XT Pro pilot ISO insert options for each APX drill series

T-A® Pilot Inserts
Lists the T-A® and GEN2 T-A® pilot insert options for each APX Drill series

Coolant-Through Option
Indicates that the product is coolant through

Series	Diameter Range	
	Imperial (inch)	Metric (mm)
33	1.299 - 1.496	33.00 - 37.99
38	1.496 - 1.732	38.00 - 43.99
44	1.732 - 2.008	44.00 - 50.99
51	2.008 - 2.244	51.00 - 56.99
57	2.244 - 2.480	57.00 - 62.99
63	2.480 - 2.756	63.00 - 69.99
70	2.756 - 2.992	70.00 - 75.99
76	2.992 - 3.268	76.00 - 82.99
83	3.268 - 3.504	83.00 - 88.99
89	3.504 - 3.740	89.00 - 94.99
95	3.740 - 4.000	95.00 - 101.60

APX™ Drill Contents

Introduction Information

Drill Selection Guide / Assembly Details . . . . . 2 - 3
Pilot Insert Options / Details 4
Product Nomenclature 5

Drill Series

33 Series . . . . . 6 - 7
38 Series . . . . . 8 - 9
44 Series . . . . . 10 - 11
51 Series . . . . . 12 - 13
57 Series . . . . . 14 - 15
63 Series . . . . . 16 - 17
70 Series . . . . . 18 - 19
76 Series . . . . . 20 - 21
83 Series . . . . . 22 - 23
89 Series . . . . . 24 - 25
95 Series . . . . . 26 - 27

Recommended Cutting Data

Imperial (inch) 28
Metric (mm) 29
Deep Hole Drilling Guidelines 30

Drill Selection Guide

Series	33	38	44	51	57
Page	6 - 7	8 - 9	10 - 11	12 - 13	14 - 15
D_5 inch	1.299 - 1.496	1.496 - 1.732	1.732 - 2.008	2.008 - 2.244	2.244 - 2.480
D_5 mm	33.00 - 37.99	38.00 - 43.99	44.00 - 50.99	51.00 - 56.99	57.00 - 62.99
ISO Material	P S M H K N	P S M H K N	P S M H K N	P S M H K N	P S M H K N
IC Insert Shape					
IC Insert Size (inch)	5/16"	3/8"	3/8", 1/2"	1/2", 9/16"	9/16"
IC Insert Size (mm)	7.94	9.53	9.53, 12.70	12.70, 14.29	14.29
Wear Pads	NO	NO	NO	NO	NO
Holders					
Drill Depth (inch)	4-7/16 - 14-29/32	5-1/8 - 17-1/4	6 - 20-1/8	6-3/8 - 22-3/8	7-1/8 - 24-3/4
Drill Depth (mm)	112.6 - 378.6	130.5 - 439.9	151.5 - 510.0	161.8 - 570.0	179.9 - 626.9
Pilot Insert					
T-A Series	0, 1	0, 1	1	1	1, 2
GEN3SYS XT Pro Series	–	15, 17, 18, 20	17, 18, 22	18, 20, 22	22, 24, 26

T-A® Style Pilot Insert Head

- Utilizes both T-A Pro and T-A inserts (0 - 2 series).
- Multiple geometry options are available to achieve optimal results in different types of applications.

GEN3SYS® XT Style Pilot Insert Head

- Utilizes GEN3SYS XT Pro inserts (15 - 32 series).
- ISO geometry options are available to achieve optimal results in different types of applications.

IC Insert AM300®

- The design allows for excellent chip control and aggressive penetration rates.
- The proprietary AM300 coatings increase tool life above competitors' premium coatings.

Insert Application Recommendations

Carbide Grade Options	
C5 (P35)	General purpose carbide grade suitable for most applications. ▶ *Common application in steels and stainless steels.*
C1 (K35)	Toughest carbide grade. Provides the best combination of edge strength and tool life. ▶ *Recommended for less rigid applications.*
C2 (K25)	Higher wear-resistant carbide suitable for abrasive material applications. ▶ *Recommended for grey, ductile, and nodular irons.*
Additional Geometry Option	
High Rake (HR)	Provides superior chip control and tool life in long-chipping carbon and alloy steels below 200 BHN.

Flanged Straight Shank

CAT40 / CAT50 Integral Shank

63	70	76	83	89	95
16 - 17	18 - 19	20 - 21	22 - 23	24 - 25	26 - 27
2.480 - 2.756	2.756 - 2.992	2.992 - 3.268	3.268 - 3.504	3.504 - 3.740	3.740 - 4.000
63.00 - 69.99	70.00 - 75.99	76.00 - 82.99	83.00 - 88.99	89.00 - 94.99	95.00 - 101.60
P S M H K N	P S M H K N	P S M H K N	P S M H K N	P S M H K N	P S M H K N
9/16"	3/8"	1/2"	1/2"	9/16"	9/16"
14.29	9.53	12.70	12.70	14.29	14.29
NO	YES	YES	YES	YES	YES
7-7/8 - 27-1/8	8-3/4 - 27-7/8	9-1/2 - 26-1/8	10-1/8 - 27-3/4	10-7/8 - 27-5/8	11-7/8 - 27-1/2
200.8 - 688.3	218.8 - 709.4	239.9 - 664.0	257.8 - 704.9	275.8 - 701.8	302.0 - 698.5
2	2	2	2	2	2
26, 29, 32	29	29	32	29	32

ASSEMBLY

Step 1:

Lower the APX head assembly onto the APX holder.

Step 2:

Insert the head mounting screws into points A and B. Tighten until the head is properly secured to the holder.

Step 3:

Tighten with the head mounting driver using the torque setting chart below.

Torque Setting Chart

Series	Screw	Driver		Torque
33 - 63	75020-IP20-1		8IP-20	60 in-lb (678 N-cm)
70 - 95	78027-IP30-1	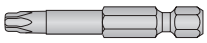	8IP-30B	250 in-lb (2825 N-cm)

Pilot Insert Options

T-A® Pilot Inserts

T-A Pro P - Steels

- Designed to provide increased penetration rates and tool life in steel applications.
- Superior geometry and edge provides excellent chip control.
- Allied's multilayer AM300® coating increases heat resistance and improves tool life.

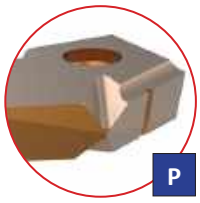

T-A Pro K - Cast Irons

- Uniquely designed for cast/ductile iron applications.
- Geometry developed for maximum tool life, reduced exit burr, and improved hole finish.
- Allied's multilayer TiAlN coating provides increased abrasion resistance and tool life.

T-A Pro N - Nonferrous Materials

- Designed for applications in aluminum, brass, and copper.
- The geometry yields excellent chip control in these softer materials.
- TiCN coating gives the versatility to run in a variety of materials while reducing buildup.

T-A Pro M - Stainless Steel

- Designed for all stainless steels and heat-resistant superalloys.
- Geometry optimized for improved chip formation while minimizing exit burr.
- Allied's new AM460 coating provides industry leading tool life in stainless and HRSA materials.

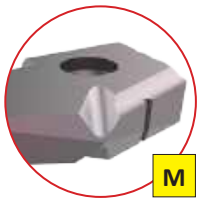

T-A Pro X - High-Speed Steel Materials

- Improved chip geometry for excellent chip control in all materials.
- Long tool life and high-process security for the most challenging applications.
- Allied's multilayer AM200® coating combines excellent heat resistance and high lubricity for wide application use.

T-A Standard

- Excellent choice for general purpose use.
- Provides fast penetration rates that produce good hole size and finish.
- Combines highly efficient, stable cutting action to minimize power consumption.

T-A Tiny Chip (-TC)

- Unique lip and point design for excellent chip control.
- Improved capabilities in long-chipping materials such as low-carbon steels and soft alloy steels.
- Enhanced performance in lower-powered machines for better chip formation at lower feed rates.

T-A High Impact (-HI)

- Designed to enhance chip formation in materials with high elasticity/ductility and poor chip forming characteristics.
- SK2 corner preparation for increased tool life.
- Improves chip formation in structural, cast, and forged steels.

GEN3SYS® XT Pro Pilot Inserts

P - Steels

- Designed to provide increased penetration rates and tool life in steel applications.
- Superior geometry and edge provides excellent chip control.
- Allied's multilayer AM420 coating increases heat resistance and improves tool life.

K - Cast Irons

- Uniquely designed for cast/nodular iron applications.
- Geometry includes a corner radius for improved hole finish and heat dispersion.
- Allied's multilayer AM440 coating provides increased abrasion resistance and tool life.

N - Nonferrous Materials

- Designed for applications in aluminum, brass, and copper.
- The geometry yields excellent chip control in these softer materials.
- TiN coating gives the versatility to run in a variety of materials while reducing buildup.

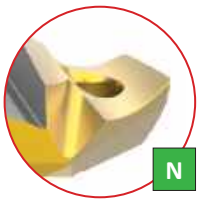

NOTE: For a complete offering of pilot inserts, see sections **A20** (GEN3SYS Drilling Systems), **A25** (T-A Pro Drilling Systems) and **A30** (T-A Drilling Systems) of our catalog.

Product Nomenclature

APX Drill Heads

V	38	15	D	–	0116
1	2	3	4		5

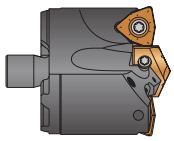

1. APX Head
V = Head

2. Series	
33 = 33 series	**70** = 70 series
38 = 38 series	**76** = 76 series
44 = 44 series	**83** = 83 series
51 = 51 series	**89** = 89 series
57 = 57 series	**95** = 95 series
63 = 63 series	

3. Pilot Series		
T-A® Pilot Insert	**GEN3SYS® XT Pro Pilot Insert**	
00 = 0 series	**15** = 15 series	**24** = 24 series
01 = 1 series	**17** = 17 series	**26** = 26 series
02 = 2 series	**18** = 18 series	**29** = 29 series
	20 = 20 series	**32** = 32 series
	22 = 22 series	

4. Effective Cutting
D = Double effective
S = Single effective

5. Major Diameter
0116 = Inch
1.5153 = Decimal
68 = Metric

Ordering Nonstocked Diameters:

Nonstocked diameters are also available. Please refer to the price list for applicable process fees. Follow the ordering examples below:

- Inch: 38 series, T-A (1 series), 1.6790" = **V3801D-1.6790**
- Metric: 38 series, T-A (1 series), 42.15 mm = **V3801D-42.15**

APX Drill Holders

W	38	05	H	–	200F
1	2	3	4		5

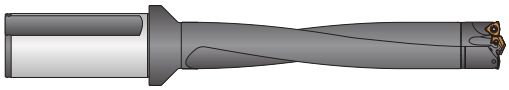

1. APX Holder
W = Holder

2. Series	
33 = 33 series	**70** = 70 series
38 = 38 series	**76** = 76 series
44 = 44 series	**83** = 83 series
51 = 51 series	**89** = 89 series
57 = 57 series	**95** = 95 series
63 = 63 series	

3. Drill Length
03 = 3xD
05 = 5xD
08 = 8xD
10 = 10xD

4. Flute Style
H = Helical

5. Shank
150F = 1-1/2" flanged straight shank
200F = 2" flanged straight shank
40FM = 40 mm flanged straight shank
50FM = 50 mm flanged straight shank
CV40 = CAT40 integral shank
CV50 = CAT50 integral shank

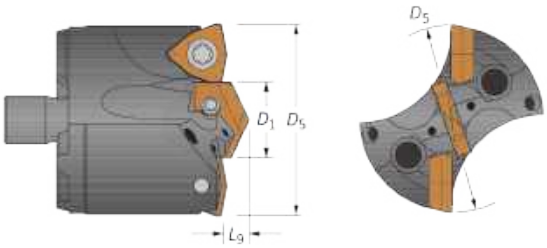

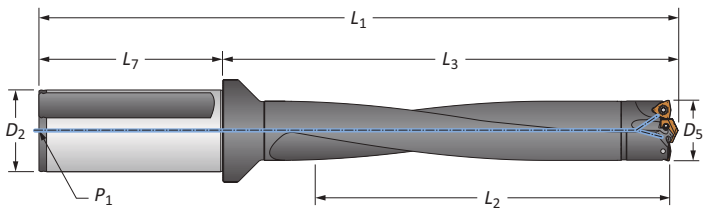

Reference Key

Symbol	Attribute
D_1	Pilot insert diameter
D_5	Major cutting diameter
L_9	Pilot insert length

Reference Key

Symbol	Attribute	Symbol	Attribute
D_2	Shank diameter	L_3	Holder reference length
D_5	Drill diameter range	L_7	Shank length
L_1	Overall length	P_1	Rear pipe tap
L_2	Drill depth		

APX Drill Heads

33 Series | Diameter Range: 1.299" - 1.496" (33.00 mm - 37.99 mm)

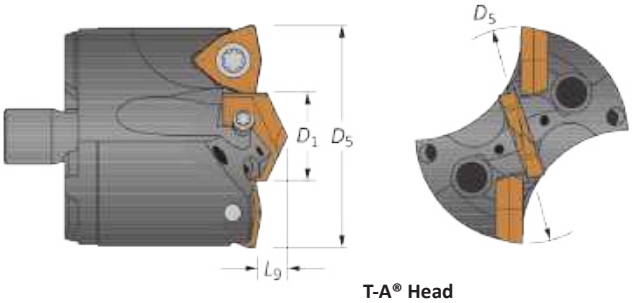

T-A® Head

Heads

Head					T-A Head				IC Insert Size	
D_5 fractional	D_5 inch	D_5 metric	D_1	L_9	Part No.	Pilot Series	T-A Pro Insert	T-A (-TC) Insert	inch	metric
-	1.299	33.00	16	7/32	**V3300D-33**	0	TA#0-16.00	1C10H-16-TC	5/16	7.94
1-5/16	1.313	33.34	16	7/32	**V3300D-0110**	0	TA#0-16.00	1C10H-16-TC	5/16	7.94
-	1.339	34.00	18	15/64	**V3301D-34**	1	TA#1-18.00	1C11H-18-TC	5/16	7.94
1-11/32	1.344	34.13	18	15/64	**V3301D-0111**	1	TA#1-18.00	1C11H-18-TC	5/16	7.94
1-3/8	1.375	34.93	18	15/64	**V3301D-0112**	1	TA#1-18.00	1C11H-18-TC	5/16	7.94
-	1.378	35.00	18	15/64	**V3301D-35**	1	TA#1-18.00	1C11H-18-TC	5/16	7.94
1-13/32	1.406	35.72	18	15/64	**V3301D-0113**	1	TA#1-18.00	1C11H-18-TC	5/16	7.94
-	1.417	36.00	20	1/4	**V3301D-36**	1	TA#1-20.00	1C11H-20-TC	5/16	7.94
1-7/16	1.438	36.51	20	1/4	**V3301D-0114**	1	TA#1-20.00	1C11H-20-TC	5/16	7.94
-	1.457	37.00	20	1/4	**V3301D-37**	1	TA#1-20.00	1C11H-20-TC	5/16	7.94
1-15/32	1.469	37.31	20	1/4	**V3301D-0115**	1	TA#1-20.00	1C11H-20-TC	5/16	7.94

#Denotes ISO material/geometry (P= steel, K= cast iron, N= nonferrous).

IC Inserts

Coating	Size inch	Size metric	Grade	Geometry	Part No.	Insert Screw	Insert Driver	Admissible Tightening Torque*
AM300®	5/16	7.94	C5 (P35)	Standard	**OP-05T308-PW**	IS-10-1	8IP-10	27.0 in-lbs (305 N-cm)
AM300®	5/16	7.94	C1 (K35)	Standard	**OP-05T308-1PW**	IS-10-1	8IP-10	27.0 in-lbs (305 N-cm)
AM300®	5/16	7.94	C2 (K25)	Standard	**OP-05T308-2PW**	IS-10-1	8IP-10	27.0 in-lbs (305 N-cm)
AM300®	5/16	7.94	C5 (P35)	High Rake	**OP-05T308-PWHR**	IS-10-1	8IP-10	27.0 in-lbs (305 N-cm)

*Tightening torques are calculated with a friction coefficient of μ = 0.14 and develop 90% of ultimate yield strength.

Pilot Accessories

Pilot Style	Series	Insert Screws	Insert Driver	Admissible Tightening Torque*
T-A	0	72567-IP8-1	8IP-8	15.5 in-lbs (175 N-cm)
T-A	1	7375-IP9-1	8IP-9	27.0 in-lbs (305 N-cm)

*Tightening torques are calculated with a friction coefficient of μ = 0.14 and develop 90% of ultimate yield strength.

A50: 28 - 29
Key on A50: 1

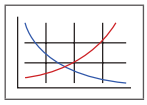

A50: 2 - 5

Section A25 & A30

Nonstocked diameters are also available. Follow the examples shown below.

Inch	38 series, T-A (1 series), 1.6790"	Part No. = **V3801D-1.6790**
Metric	38 series, T-A (1 series), 42.15 mm	Part No. = **V3801D-42.15**

IC inserts sold in multiples of 2. | Insert screws sold in multiples of 10.

APX Drill Holders

33 Series | Diameter Range: 1.299" - 1.496" (33.00 mm - 37.99 mm)

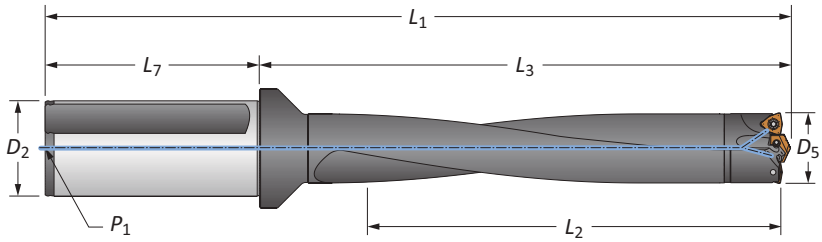

Straight Shank

	Length	D_5	Body L_2	Body L_3	Body L_1	Shank L_7	Shank D_2	Shank P_1	Part No.
i	3xD	1.299 - 1.496	4-7/16	6-19/32	9-9/32	2-11/16	1-1/2	1/4 NPT	**W3303H-150F**
i	5xD	1.299 - 1.496	7-27/64	9-37/64	12-9/32	2-11/16	1-1/2	1/4 NPT	**W3305H-150F**
i	8xD	1.299 - 1.496	11-59/64	14-5/64	16-3/4	2-11/16	1-1/2	1/4 NPT	⚠ **W3308H-150F**
i	10xD	1.299 - 1.496	14-29/32	17-1/16	19-3/4	2-11/16	1-1/2	1/4 NPT	⚠ **W3310H-150F**
m	3xD	33.00 - 37.99	112.60	167.49	237.49	70.00	40.00	1/4 BSPT	**W3303H-40FM**
m	5xD	33.00 - 37.99	188.60	243.41	313.41	70.00	40.00	1/4 BSPT	**W3305H-40FM**
m	8xD	33.00 - 37.99	302.60	357.40	427.40	70.00	40.00	1/4 BSPT	⚠ **W3308H-40FM**
m	10xD	33.00 - 37.99	378.61	433.40	503.40	70.00	40.00	1/4 BSPT	⚠ **W3310H-40FM**

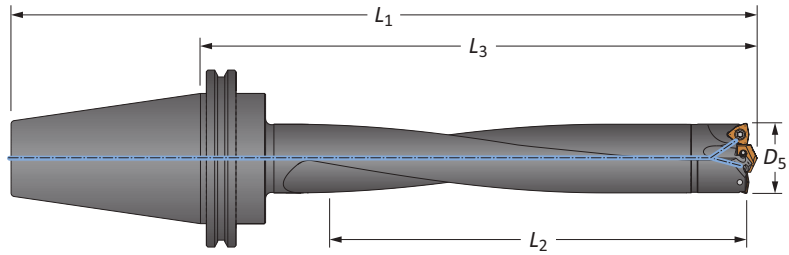

CAT Integral Shank

	Length	D_5 inch	D_5 mm	Body L_2	Body L_3	Body L_1	Shank	Part No.
i	3xD	1.299 - 1.496	33.00 - 37.99	4-7/16	7-3/8	10-3/16	CV40	**W3303H-CV40**
i	5xD	1.299 - 1.496	33.00 - 37.99	7-27/64	10-23/64	13-11/64	CV40	**W3305H-CV40**
i	8xD	1.299 - 1.496	33.00 - 37.99	11-59/64	14-55/64	17-21/32	CV40	⚠ **W3308H-CV40**
i	10xD	1.299 - 1.496	33.00 - 37.99	14-29/32	17-27/32	20-21/32	CV40	⚠ **W3310H-CV40**
i	3xD	1.299 - 1.496	33.00 - 37.99	4-7/16	7-3/8	11-1/2	CV50	**W3303H-CV50**
i	5xD	1.299 - 1.496	33.00 - 37.99	7-27/64	10-23/64	14-31/64	CV50	**W3305H-CV50**
i	8xD	1.299 - 1.496	33.00 - 37.99	11-59/64	14-55/64	18-31/32	CV50	⚠ **W3308H-CV50**
i	10xD	1.299 - 1.496	33.00 - 37.99	14-29/32	17-27/32	21-31/32	CV50	⚠ **W3310H-CV50**

Connection Accessories

Mounting Screw	Mounting Screw Driver	Admissible Tightening Torque*
75020-IP20-1	8IP-20	60 in-lb (678 N-cm)

*Tightening torques are calculated with a friction coefficient of μ = 0.14 and develop 90% of ultimate yield strength.

⚠ **WARNING** Refer to Speed and Feed charts for recommended adjustments to speeds and feeds. Refer to page A50: 30 for deep hole drilling guidelines in this section of the catalog. Visit **www.alliedmachine.com/DeepHoleGuidelines** for the most up-to-date information and procedures. Factory technical assistance is available for your specific applications through our Application Engineering Team.
ext: **7611** | *email:* **appeng@alliedmachine.com**

i = Imperial (in)
m = Metric (mm)
Mounting screws sold in multiples of 4.

APX Drill Heads

38 Series | Diameter Range: 1.496" - 1.732" (38.00 mm - 43.99 mm)

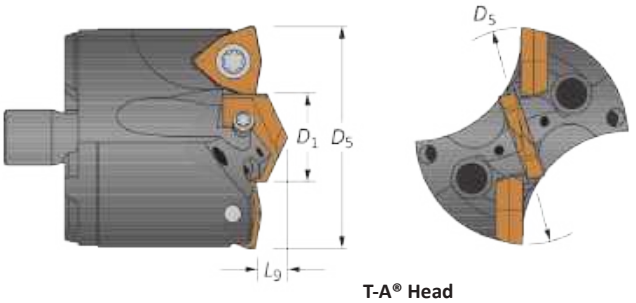

T-A® Head

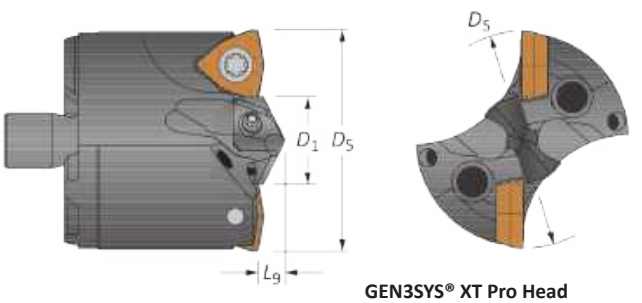

GEN3SYS® XT Pro Head

Heads

Head					T-A Head				GEN3SYS XT Pro Head			IC Insert Size	
D_5 fractional	D_5 inch	D_5 metric	D_1	L_9	Part No.	Pilot Series	T-A Pro Insert	T-A (-TC) Insert	Part No.	Pilot Series	Pilot Insert	inch	metric
-	1.496	38.00	5/8	19/64	**V3800D-38**	0	TA#0-15.88	1C10H-0020-TC	**V3815D-38**	15	XT#15-15.88	3/8	9.53
1-1/2	1.500	38.10	5/8	19/64	**V3800D-0116**	0	TA#0-15.88	1C10H-0020-TC	**V3815D-0116**	15	XT#15-15.88	3/8	9.53
1-17/32	1.531	38.90	5/8	19/64	**V3800D-0117**	0	TA#0-15.88	1C10H-0020-TC	**V3815D-0117**	15	XT#15-15.88	3/8	9.53
-	1.535	39.00	5/8	19/64	**V3800D-39**	0	TA#0-15.88	1C10H-0020-TC	**V3815D-39**	15	XT#15-15.88	3/8	9.53
1-9/16	1.563	39.69	5/8	19/64	**V3800D-0118**	0	TA#0-15.88	1C10H-0020-TC	**V3815D-0118**	15	XT#15-15.88	3/8	9.53
-	1.575	40.00	11/16	19/64	**V3800D-40**	0	TA#0-17.46	1C10H-0022-TC	**V3817D-40**	17	XT#17-17.46	3/8	9.53
1-19/32	1.594	40.48	11/16	19/64	**V3800D-0119**	0	TA#0-17.46	1C10H-0022-TC	**V3817D-0119**	17	XT#17-17.46	3/8	9.53
-	1.614	41.00	11/16	19/64	**V3800D-41**	0	TA#0-17.46	1C10H-0022-TC	**V3817D-41**	17	XT#17-17.46	3/8	9.53
1-5/8	1.625	41.28	11/16	19/64	**V3800D-0120**	0	TA#0-17.46	1C10H-0022-TC	**V3817D-0120**	17	XT#17-17.46	3/8	9.53
-	1.654	42.00	3/4	19/64	**V3801D-42**	1	TA#1-19.05	1C11H-0024-TC	**V3818D-42**	18	XT#18-19.05	3/8	9.53
1-21/32	1.656	42.07	3/4	19/64	**V3801D-0121**	1	TA#1-19.05	1C11H-0024-TC	**V3818D-0121**	18	XT#18-19.05	3/8	9.53
1-11/16	1.688	42.86	3/4	19/64	**V3801D-0122**	1	TA#1-19.05	1C11H-0024-TC	**V3818D-0122**	18	XT#18-19.05	3/8	9.53
-	1.693	43.00	13/16	19/64	**V3801D-43**	1	TA#1-20.64	1C11H-0026-TC	**V3820D-43**	20	XT#20-20.64	3/8	9.53
1-23/32	1.719	43.66	13/16	19/64	**V3801D-0123**	1	TA#1-20.64	1C11H-0026-TC	**V3820D-0123**	20	XT#20-20.64	3/8	9.53

#Denotes ISO material/geometry (P= steel, K= cast iron, N= nonferrous).

IC Inserts

Coating	Size inch	Size metric	Grade	Geometry	Part No.	Insert Screw	Insert Driver	Admissible Tightening Torque*
AM300®	3/8	9.53	C5 (P35)	Standard	**OP-060408-PW**	73595-IP15-1	8IP-15	41.0 in-lbs (465 N-cm)
AM300®	3/8	9.53	C1 (K35)	Standard	**OP-060408-1PW**	73595-IP15-1	8IP-15	41.0 in-lbs (465 N-cm)
AM300®	3/8	9.53	C2 (K25)	Standard	**OP-060408-2PW**	73595-IP15-1	8IP-15	41.0 in-lbs (465 N-cm)
AM300®	3/8	9.53	C5 (P35)	High Rake	**OP-060408-PWHR**	73595-IP15-1	8IP-15	41.0 in-lbs (465 N-cm)

*Tightening torques are calculated with a friction coefficient of μ = 0.14 and develop 90% of ultimate yield strength.

Pilot Accessories

Pilot Style	Series	Insert Screws	Insert Driver	Admissible Tightening Torque*
T-A	0	72567-IP8-1	8IP-8	15.5 in-lbs (175 N-cm)
T-A	1	7375-IP9-1	8IP-9	27.0 in-lbs (305 N-cm)
GEN3SYS	15	7247-IP7-1	8IP-7	7.4 in-lbs (84 N-cm)
GEN3SYS	17	72567-IP8-1	8IP-8	15.5 in-lbs (175 N-cm)
GEN3SYS	18	7375-IP9-1	8IP-9	27.0 in-lbs (305 N-cm)
GEN3SYS	20	7375-IP9-1	8IP-9	27.0 in-lbs (305 N-cm)

*Tightening torques are calculated with a friction coefficient of μ = 0.14 and develop 90% of ultimate yield strength.

A50: 28 - 29
Key on A50: 1

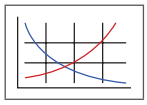

A50: 2 - 5

Section A20

Section A25 & A30

Nonstocked diameters are also available. Follow the examples shown below.

Inch	38 series, T-A (1 series), 1.6790"	Part No. = **V3801D-1.6790**
Metric	38 series, T-A (1 series), 42.15 mm	Part No. = **V3801D-42.15**

IC inserts sold in multiples of 2. | Insert screws sold in multiples of 10.

APX Drill Holders

38 Series | Diameter Range: 1.496" - 1.732" (38.00 mm - 43.99 mm)

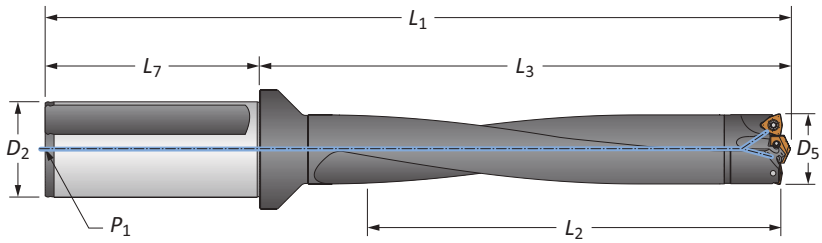

Straight Shank

	Length	D_5	Body L_2	Body L_3	Body L_1	Shank L_7	Shank D_2	Shank P_1	Part No.
i	3xD	1.496 - 1.732	5-1/8	7-47/64	10-25/64	2-11/16	1-1/2	1/4 NPT	W3803H-150F
	5xD	1.496 - 1.732	8-5/8	11-13/64	13-55/64	2-11/16	1-1/2	1/4 NPT	W3805H-150F
	8xD	1.496 - 1.732	13-7/8	16-25/64	19-3/64	2-11/16	1-1/2	1/4 NPT	⚠ W3808H-150F
	10xD	1.496 - 1.732	17-1/4	19-27/32	22-33/64	2-11/16	1-1/2	1/4 NPT	⚠ W3810H-150F
	3xD	1.496 - 1.732	5-1/8	7-47/64	12-15/64	4-1/2	2	1/4 NPT	W3803H-200F
	5xD	1.496 - 1.732	8-5/8	11-13/64	15-45/64	4-1/2	2	1/4 NPT	W3805H-200F
	8xD	1.496 - 1.732	13-7/8	16-25/64	20-57/64	4-1/2	2	1/4 NPT	⚠ W3808H-200F
	10xD	1.496 - 1.732	17-1/4	19-27/32	24-59/64	4-1/2	2	1/4 NPT	⚠ W3810H-200F
m	3xD	38.00 - 43.99	130.51	196.49	265.71	70.00	40.00	1/4 BSPT	W3803H-40FM
	5xD	38.00 - 43.99	219.99	284.51	353.70	70.00	40.00	1/4 BSPT	W3805H-40FM
	8xD	38.00 - 43.99	351.99	416.51	485.70	70.00	40.00	1/4 BSPT	⚠ W3808H-40FM
	10xD	38.00 - 43.99	439.90	503.91	573.71	70.00	40.00	1/4 BSPT	⚠ W3810H-40FM
	3xD	38.00 - 43.99	130.51	196.49	276.50	80.00	50.00	1/4 BSPT	W3803H-50FM
	5xD	38.00 - 43.99	219.99	284.51	364.49	80.00	50.00	1/4 BSPT	W3805H-50FM
	8xD	38.00 - 43.99	351.99	416.51	496.99	80.00	50.00	1/4 BSPT	⚠ W3808H-50FM
	10xD	38.00 - 43.99	439.90	503.90	583.91	80.00	50.00	1/4 BSPT	⚠ W3810H-50FM

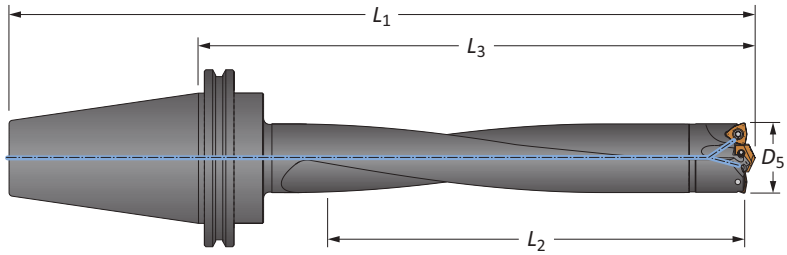

CAT Integral Shank

	Length	D_5 inch	D_5 mm	Body L_2	Body L_3	Body L_1	Shank	Part No.
i	3xD	1.496 - 1.732	38.00 - 43.99	5-1/8	8-5/16	11	CV40	W3803H-CV40
	5xD	1.496 - 1.732	38.00 - 43.99	8-5/8	11-49/64	14-29/64	CV40	W3805H-CV40
	8xD	1.496 - 1.732	38.00 - 43.99	13-7/8	16-31/32	19-21/32	CV40	⚠ W3808H-CV40
	10xD	1.496 - 1.732	38.00 - 43.99	17-1/4	20-7/16	23-1/8	CV40	⚠ W3810H-CV40
	3xD	1.496 - 1.732	38.00 - 43.99	5-1/8	8-5/16	12-5/16	CV50	W3803H-CV50
	5xD	1.496 - 1.732	38.00 - 43.99	8-5/8	11-49/64	15-49/64	CV50	W3805H-CV50
	8xD	1.496 - 1.732	38.00 - 43.99	13-7/8	16-31/32	20-31/32	CV50	⚠ W3808H-CV50
	10xD	1.496 - 1.732	38.00 - 43.99	17-1/4	20-7/16	24-7/16	CV50	⚠ W3810H-CV50

Connection Accessories

Mounting Screw	Mounting Screw Driver	Admissible Tightening Torque*
75020-IP20-1	8IP-20	60 in-lb (678 N-cm)

*Tightening torques are calculated with a friction coefficient of μ = 0.14 and develop 90% of ultimate yield strength.

⚠ WARNING Refer to Speed and Feed charts for recommended adjustments to speeds and feeds. Refer to page A50: 30 for deep hole drilling guidelines in this section of the catalog. Visit **www.alliedmachine.com/DeepHoleGuidelines** for the most up-to-date information and procedures. Factory technical assistance is available for your specific applications through our Application Engineering Team.
ext: **7611** | *email:* **appeng@alliedmachine.com**

i = Imperial (in)
m = Metric (mm)
Mounting screws sold in multiples of 4.

APX Drill Heads

44 Series | Diameter Range: 1.732" - 2.008" (44.00 mm - 50.99 mm)

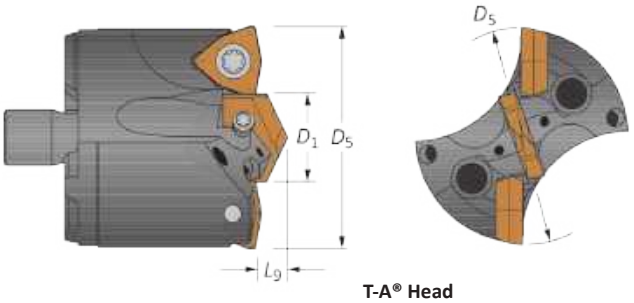

T-A® Head

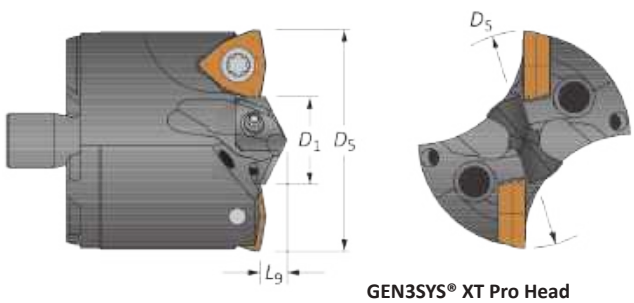

GEN3SYS® XT Pro Head

Heads

Head					T-A Head				GEN3SYS XT Pro Head			IC Insert Size	
D_5 fractional	D_5 inch	D_5 metric	D_1	L_9	Part No.	Pilot Series	T-A Pro Insert	T-A (-TC) Insert	Part No.	Pilot Series	Pilot Insert	inch	metric
-	1.732	44.00	7/8	21/64	**V4401D-44**	1	TA#1-22.23	1C11H-0028-TC	**V4422D-44**	22	XT#22-22.23	3/8	9.53
1-3/4	1.750	44.45	7/8	21/64	**V4401D-0124**	1	TA#1-22.23	1C11H-0028-TC	**V4422D-0124**	22	XT#22-22.23	3/8	9.53
-	1.772	45.00	7/8	21/64	**V4401D-45**	1	TA#1-22.23	1C11H-0028-TC	**V4422D-45**	22	XT#22-22.23	3/8	9.53
1-25/32	1.781	45.25	7/8	21/64	**V4401D-0125**	1	TA#1-22.23	1C11H-0028-TC	**V4422D-0125**	22	XT#22-22.23	3/8	9.53
-	1.811	46.00	15/16	21/64	**V4401D-46**	1	TA#1-23.81	1C11H-0030-TC	**V4422D-46**	22	XT#22-23.81	3/8	9.53
1-13/16	1.813	46.04	15/16	21/64	**V4401D-0126**	1	TA#1-23.81	1C11H-0030-TC	**V4422D-0126**	22	XT#22-23.81	3/8	9.53
1-27/32	1.844	46.83	15/16	21/64	**V4401D-0127**	1	TA#1-23.81	1C11H-0030-TC	**V4422D-0127**	22	XT#22-23.81	3/8	9.53
-	1.850	47.00	15/16	21/64	**V4401D-47**	1	TA#1-23.81	1C11H-0030-TC	**V4422D-47**	22	XT#22-23.81	3/8	9.53
1-7/8	1.875	47.63	15/16	21/64	**V4401D-0128**	1	TA#1-23.81	1C11H-0030-TC	**V4422D-0128**	22	XT#22-23.81	3/8	9.53
-	1.890	48.00	45/64	21/64	**V4401D-48**	1**	TA#1-17.86	1C11H-.703-TC	**V4417D-48**	17	XT#17-17.86	1/2	12.70
1-29/32	1.906	48.42	45/64	21/64	**V4401D-0129**	1**	TA#1-17.86	1C11H-.703-TC	**V4417D-0129**	17	XT#17-17.86	1/2	12.70
-	1.929	49.00	45/64	21/64	**V4401D-49**	1**	TA#1-17.86	1C11H-.703-TC	**V4417D-49**	17	XT#17-17.86	1/2	12.70
1-15/16	1.938	49.21	45/64	21/64	**V4401D-0130**	1**	TA#1-17.86	1C11H-.703-TC	**V4417D-0130**	17	XT#17-17.86	1/2	12.70
-	1.969	50.00	47/64	21/64	**V4401D-50**	1**	TA#1-18.65	1C11H-.734-TC	**V4418D-50**	18	XT#18-18.65	1/2	12.70
1-31/32	1.969	50.01	47/64	21/64	**V4401D-0131**	1**	TA#1-18.65	1C11H-.734-TC	**V4418D-0131**	18	XT#18-18.65	1/2	12.70
2	2.000	50.80	47/64	21/64	**V4401D-0200**	1**	TA#1-18.65	1C11H-.734-TC	**V4418D-0200**	18	XT#18-18.65	1/2	12.70

#Denotes ISO material/geometry (P= steel, K= cast iron, N= nonferrous).
**Note: coordinating screw in accessory table below.

IC Inserts

Coating	Size inch	Size metric	Grade	Geometry	Part No.	Insert Screw	Insert Driver	Admissible Tightening Torque*
AM300®	3/8	9.53	C5 (P35)	Standard	**OP-060408-PW**	73595-IP15-1	8IP-15	41.0 in-lbs (465 N-cm)
AM300®	3/8	9.53	C1 (K35)	Standard	**OP-060408-1PW**	73595-IP15-1	8IP-15	41.0 in-lbs (465 N-cm)
AM300®	3/8	9.53	C2 (K25)	Standard	**OP-060408-2PW**	73595-IP15-1	8IP-15	41.0 in-lbs (465 N-cm)
AM300®	3/8	9.53	C5 (P35)	High Rake	**OP-060408-PWHR**	73595-IP15-1	8IP-15	41.0 in-lbs (465 N-cm)
AM300®	1/2	12.70	C5 (P35)	Standard	**OP-080508-PW**	74012-IP15-1	8IP-15	61.0 in-lbs (690 N-cm)
AM300®	1/2	12.70	C1 (K35)	Standard	**OP-080508-1PW**	74012-IP15-1	8IP-15	61.0 in-lbs (690 N-cm)
AM300®	1/2	12.70	C2 (K25)	Standard	**OP-080508-2PW**	74012-IP15-1	8IP-15	61.0 in-lbs (690 N-cm)
AM300®	1/2	12.70	C5 (P35)	High Rake	**OP-080508-PWHR**	74012-IP15-1	8IP-15	61.0 in-lbs (690 N-cm)

*Tightening torques are calculated with a friction coefficient of μ = 0.14 and develop 90% of ultimate yield strength.

Pilot Accessories

Pilot Style	Series	Insert Screws	Insert Driver	Admissible Tightening Torque*
T-A	1	739-IP9-1	8IP-9	27.0 in-lbs (305 N-cm)
T-A	1**	7375-IP9-1	8IP-9	27.0 in-lbs (305 N-cm)
GEN3SYS	17	72567-IP8-1	8IP-8	15.5 in-lbs (175 N-cm)
GEN3SYS	18	7375-IP9-1	8IP-9	27.0 in-lbs (305 N-cm)
GEN3SYS	22	739-IP9-1	8IP-9	27.0 in-lbs (305 N-cm)

*Tightening torques are calculated with a friction coefficient of μ = 0.14 and develop 90% of ultimate yield strength.

A50: 28 - 29

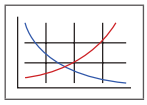

Key on A50: 1

A50: 2 - 5

Section A20

Section A25 & A30

Nonstocked diameters are also available. Follow the examples shown below.

Inch	38 series, T-A (1 series), 1.6790"	Part No. = **V3801D-1.6790**
Metric	38 series, T-A (1 series), 42.15 mm	Part No. = **V3801D-42.15**

IC inserts sold in multiples of 2. | Insert screws sold in multiples of 10.

APX Drill Holders

44 Series | Diameter Range: 1.732" - 2.008" (44.00 mm - 50.99 mm)

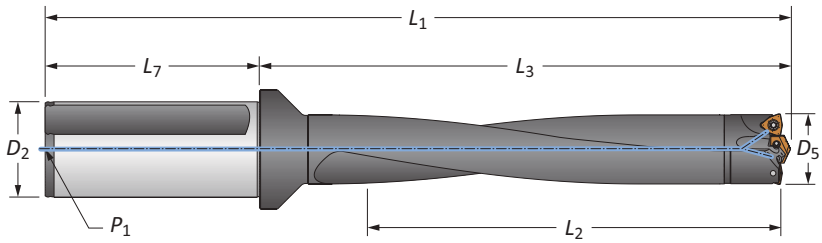

Straight Shank

	Length	D_5	Body L_2	Body L_3	Body L_1	Shank L_7	Shank D_2	Shank P_1	Part No.
i	3xD	1.732 - 2.008	6	8-17/32	11-15/64	2-11/16	1-1/2	1/4 NPT	W4403H-150F
	5xD	1.732 - 2.008	10	12-35/64	15-1/4	2-11/16	1-1/2	1/4 NPT	W4405H-150F
	8xD	1.732 - 2.008	16	18-37/64	21-17/64	2-11/16	1-1/2	1/4 NPT	⚠ W4408H-150F
	10xD	1.732 - 2.008	20-1/8	22-19/32	25-9/32	2-11/16	1-1/2	1/4 NPT	⚠ W4410H-150F
	3xD	1.732 - 2.008	6	8-33/64	13-1/32	4-1/2	2	1/4 NPT	W4403H-200F
	5xD	1.732 - 2.008	10	12-35/64	17-3/64	4-1/2	2	1/4 NPT	W4405H-200F
	8xD	1.732 - 2.008	16	18-37/64	23-5/64	4-1/2	2	1/4 NPT	⚠ W4408H-200F
	10xD	1.732 - 2.008	20-1/8	22-19/32	27-3/32	4-1/2	2	1/4 NPT	⚠ W4410H-200F
m	3xD	44.00 - 50.99	152.00	216.79	286.89	70.00	40.00	1/4 BSPT	W4403H-40FM
	5xD	44.00 - 50.99	255.00	318.80	388.90	70.00	40.00	1/4 BSPT	W4405H-40FM
	8xD	44.00 - 50.99	408.00	471.81	541.81	70.00	40.00	1/4 BSPT	⚠ W4408H-40FM
	10xD	44.00 - 50.99	510.01	573.81	643.79	70.00	40.00	1/4 BSPT	⚠ W4410H-40FM
	3xD	44.00 - 50.99	152.00	216.79	296.90	80.00	50.00	1/4 BSPT	W4403H-50FM
	5xD	44.00 - 50.99	255.00	318.80	398.80	80.00	50.00	1/4 BSPT	W4405H-50FM
	8xD	44.00 - 50.99	409.00	471.70	551.69	80.00	50.00	1/4 BSPT	⚠ W4408H-50FM
	10xD	44.00 - 50.99	510.01	573.81	653.80	80.00	50.00	1/4 BSPT	⚠ W4410H-50FM

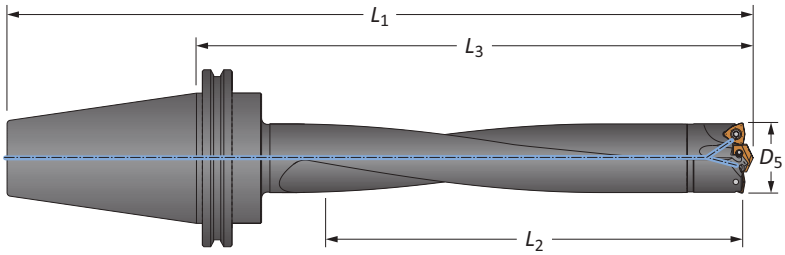

CAT Integral Shank

	Length	D_5 inch	D_5 mm	Body L_2	Body L_3	Body L_1	Shank	Part No.
i	3xD	1.732 - 2.008	44.00 - 50.99	6	9-1/4	11-15/16	CV40	W4403H-CV40
	5xD	1.732 - 2.008	44.00 - 50.99	10	13-17/64	15-61/64	CV40	W4405H-CV40
	8xD	1.732 - 2.008	44.00 - 50.99	16	19-19/64	21-63/64	CV40	⚠ W4408H-CV40
	10xD	1.732 - 2.008	44.00 - 50.99	20-1/8	23-5/16	26	CV40	⚠ W4410H-CV40
	3xD	1.732 - 2.008	44.00 - 50.99	6	9-1/4	13-1/4	CV50	W4403H-CV50
	5xD	1.732 - 2.008	44.00 - 50.99	10	13-17/64	17-17/64	CV50	W4405H-CV50
	8xD	1.732 - 2.008	44.00 - 50.99	16	19-19/64	23-19/64	CV50	⚠ W4408H-CV50
	10xD	1.732 - 2.008	44.00 - 50.99	20	23-5/16	27-5/16	CV50	⚠ W4410H-CV50

Connection Accessories

Mounting Screw	Mounting Screw Driver	Admissible Tightening Torque*
75020-IP20-1	8IP-20	60 in-lb (678 N-cm)

*Tightening torques are calculated with a friction coefficient of μ = 0.14 and develop 90% of ultimate yield strength.

⚠ WARNING Refer to Speed and Feed charts for recommended adjustments to speeds and feeds. Refer to page A50: 30 for deep hole drilling guidelines in this section of the catalog. Visit **www.alliedmachine.com/DeepHoleGuidelines** for the most up-to-date information and procedures. Factory technical assistance is available for your specific applications through our Application Engineering Team.
ext: **7611** | *email:* **appeng@alliedmachine.com**

i = Imperial (in)
m = Metric (mm)
Mounting screws sold in multiples of 4.

APX Drill Heads

51 Series | Diameter Range: 2.008" - 2.244" (51.00 mm - 56.99 mm)

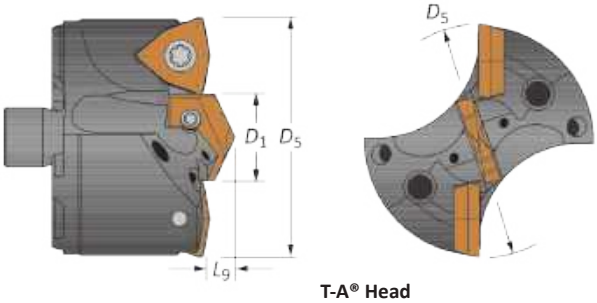

T-A® Head

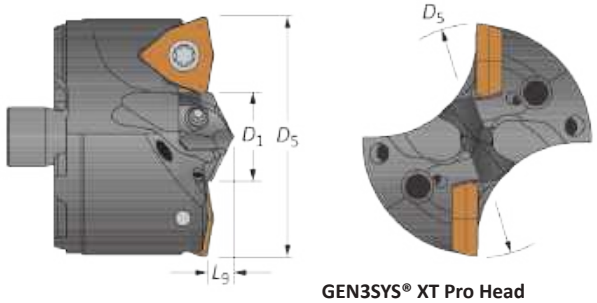

GEN3SYS® XT Pro Head

Heads

Head					T-A Head				GEN3SYS XT Pro Head			IC Insert Size	
D_5 fractional	D_5 inch	D_5 metric	D_1	L_9	Part No.	Pilot Series	T-A Pro Insert	T-A (-TC) Insert	Part No.	Pilot Series	Pilot Insert	inch	metric
-	2.008	51.00	25/32	11/32	**V5101D-51**	1**	TA#1-19.84	1C11H-0025-TC	**V5118D-51**	18	XT#18-19.84	1/2	12.70
2-1/32	2.031	51.59	25/32	11/32	**V5101D-0201**	1**	TA#1-19.84	1C11H-0025-TC	**V5118D-0201**	18	XT#18-19.84	1/2	12.70
-	2.047	52.00	25/32	11/32	**V5101D-52**	1**	TA#1-19.84	1C11H-0025-TC	**V5118D-52**	18	XT#18-19.84	1/2	12.70
2-1/16	2.063	52.39	25/32	11/32	**V5101D-0202**	1**	TA#1-19.84	1C11H-0025-TC	**V5118D-0202**	18	XT#18-19.84	1/2	12.70
-	2.087	53.00	27/32	11/32	**V5101D-53**	1**	TA#1-21.43	1C11H-0027-TC	**V5120D-53**	20	XT#20-21.43	1/2	12.70
2-3/32	2.094	53.18	27/32	11/32	**V5101D-0203**	1**	TA#1-21.43	1C11H-0027-TC	**V5120D-0203**	20	XT#20-21.43	1/2	12.70
2-1/8	2.125	53.98	27/32	11/32	**V5101D-0204**	1**	TA#1-21.43	1C11H-0027-TC	**V5120D-0204**	20	XT#20-21.43	1/2	12.70
-	2.126	54.00	15/16	11/32	**V5101D-54**	1	TA#1-23.81	1C11H-0030-TC	**V5122D-54**	22	XT#22-23.81	1/2	12.70
2-5/32	2.156	54.77	15/16	11/32	**V5101D-0205**	1	TA#1-23.81	1C11H-0030-TC	**V5122D-0205**	22	XT#22-23.81	1/2	12.70
-	2.165	55.00	15/16	11/32	**V5101D-55**	1	TA#1-23.81	1C11H-0030-TC	**V5122D-55**	22	XT#22-23.81	1/2	12.70
2-3/16	2.188	55.56	15/16	11/32	**V5101D-0206**	1	TA#1-23.81	1C11H-0030-TC	**V5122D-0206**	22	XT#22-23.81	1/2	12.70
-	2.205	56.00	15/16	11/32	**V5101D-56**	1	TA#1-23.81	1C11H-0030-TC	**V5122D-56**	22	XT#22-23.81	1/2	12.70
2-7/32	2.219	56.36	13/16	11/32	**V5101D-0207**	1**	TA#1-20.64	1C11H-0026-TC	**V5120D-0207**	20	XT#20-20.64	9/16	14.29

#Denotes ISO material/geometry (P= steel, K= cast iron, N= nonferrous).
**Note: coordinating screw in accessory table below.

IC Inserts

Coating	Size inch	Size metric	Grade	Geometry	Part No.	Insert Screw	Insert Driver	Admissible Tightening Torque*
AM300®	1/2	12.70	C5 (P35)	Standard	**OP-080508-PW**	74012-IP15-1	8IP-15	61.0 in-lbs (690 N-cm)
AM300®	1/2	12.70	C1 (K35)	Standard	**OP-080508-1PW**	74012-IP15-1	8IP-15	61.0 in-lbs (690 N-cm)
AM300®	1/2	12.70	C2 (K25)	Standard	**OP-080508-2PW**	74012-IP15-1	8IP-15	61.0 in-lbs (690 N-cm)
AM300®	1/2	12.70	C5 (P35)	High Rake	**OP-080508-PWHR**	74012-IP15-1	8IP-15	61.0 in-lbs (690 N-cm)
AM300®	9/16	14.29	C5 (P35)	Standard	**OP-090608-PW**	75014-IP20-1	8IP-20	121.0 in-lbs (1370 N-cm)
AM300®	9/16	14.29	C1 (K35)	Standard	**OP-090608-1PW**	75014-IP20-1	8IP-20	121.0 in-lbs (1370 N-cm)
AM300®	9/16	14.29	C2 (K25)	Standard	**OP-090608-2PW**	75014-IP20-1	8IP-20	121.0 in-lbs (1370 N-cm)
AM300®	9/16	14.29	C5 (P35)	High Rake	**OP-090608-PWHR**	75014-IP20-1	8IP-20	121.0 in-lbs (1370 N-cm)

*Tightening torques are calculated with a friction coefficient of μ = 0.14 and develop 90% of ultimate yield strength.

Pilot Accessories

Pilot Style	Series	Insert Screws	Insert Driver	Admissible Tightening Torque*
T-A	1	739-IP9-1	8IP-9	27.0 in-lbs (305 N-cm)
T-A	1**	7375-IP9-1	8IP-9	27.0 in-lbs (305 N-cm)
GEN3SYS	18	7375-IP9-1	8IP-9	27.0 in-lbs (305 N-cm)
GEN3SYS	20	7375-IP9-1	8IP-9	27.0 in-lbs (305 N-cm)
GEN3SYS	22	739-IP9-1	8IP-9	27.0 in-lbs (305 N-cm)

*Tightening torques are calculated with a friction coefficient of μ = 0.14 and develop 90% of ultimate yield strength.

A50: 28 - 29

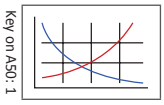

A50: 2 - 5

Section A20

Section A25 & A30

Nonstocked diameters are also available. Follow the examples shown below.

Inch	38 series, T-A (1 series), 1.6790"	Part No. = **V3801D-1.6790**
Metric	38 series, T-A (1 series), 42.15 mm	Part No. = **V3801D-42.15**

IC inserts sold in multiples of 2. | Insert screws sold in multiples of 10.

APX Drill Holders

51 Series | Diameter Range: 2.008" - 2.244" (51.00 mm - 56.99 mm)

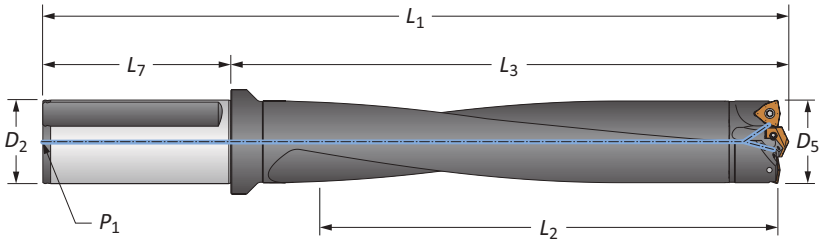

Straight Shank

	Length	D_5	Body L_2	Body L_3	Body L_1	Shank L_7	Shank D_2	Shank P_1	Part No.
i	3xD	2.008 - 2.244	6-3/8	8-7/8	13-3/8	4-1/2	2	1/4 NPT	**W5103H-200F**
i	5xD	2.008 - 2.244	11-1/8	13-3/8	17-7/8	4-1/2	2	1/4 NPT	**W5105H-200F**
i	8xD	2.008 - 2.244	17-7/8	20-3/32	24-19/32	4-1/2	2	1/4 NPT	⚠ **W5108H-200F**
i	10xD	2.008 - 2.244	22-3/8	24-19/32	29-3/32	4-1/2	2	1/4 NPT	⚠ **W5110H-200F**
m	3xD	51.00 - 56.99	161.80	225.50	305.51	80.00	50.00	1/4 BSPT	**W5103H-50FM**
m	5xD	51.00 - 56.99	284.99	339.60	419.61	80.00	50.00	1/4 BSPT	**W5105H-50FM**
m	8xD	51.00 - 56.99	455.90	510.49	590.50	80.00	50.00	1/4 BSPT	⚠ **W5108H-50FM**
m	10xD	51.00 - 56.99	570.00	624.61	704.60	80.00	50.00	1/4 BSPT	⚠ **W5110H-50FM**

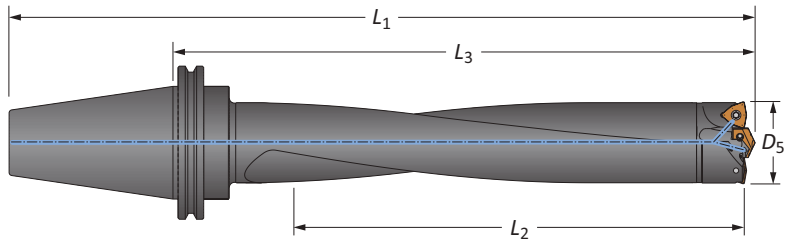

CV50 Shank

	Length	D_5 inch	D_5 mm	Body L_2	Body L_3	Body L_1	Shank	Part No.
i	3xD	2.008 - 2.244	51.00 - 56.99	6-3/8	9-47/64	13-47/64	CV50	**W5103H-CV50**
i	5xD	2.008 - 2.244	51.00 - 56.99	11-1/4	14-7/32	18-7/32	CV50	**W5105H-CV50**
i	8xD	2.008 - 2.244	51.00 - 56.99	17-7/8	20-61/64	24-61/64	CV50	⚠ **W5108H-CV50**
i	10xD	2.008 - 2.244	51.00 - 56.99	22-3/8	25-7/16	29-7/16	CV50	⚠ **W5110H-CV50**

Connection Accessories

Mounting Screw	Mounting Screw Driver	Admissible Tightening Torque*
75020-IP20-1	8IP-20	60 in-lb (678 N-cm)

*Tightening torques are calculated with a friction coefficient of μ = 0.14 and develop 90% of ultimate yield strength.

⚠ **WARNING** Refer to Speed and Feed charts for recommended adjustments to speeds and feeds. Refer to page A50: 30 for deep hole drilling guidelines in this section of the catalog. Visit **www.alliedmachine.com/DeepHoleGuidelines** for the most up-to-date information and procedures. Factory technical assistance is available for your specific applications through our Application Engineering Team.
ext: **7611** | *email:* **appeng@alliedmachine.com**

i = Imperial (in)
m = Metric (mm)
Mounting screws sold in multiples of 4.

APX Drill Heads

57 Series | Diameter Range: 2.244" - 2.480" (57.00 mm - 62.99 mm)

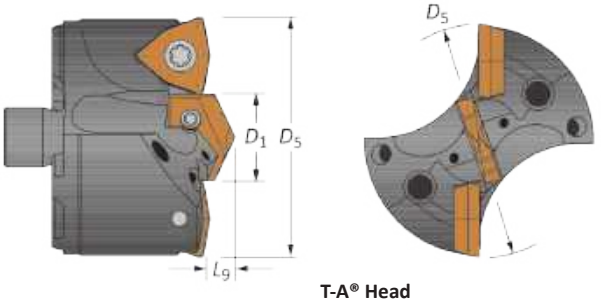

T-A® Head

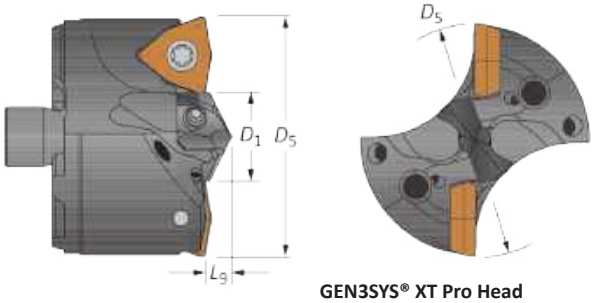

GEN3SYS® XT Pro Head

Heads

Head					T-A Head				GEN3SYS XT Pro Head			IC Insert Size	
D_5 fractional	D_5 inch	D_5 metric	D_1	L_9	Part No.	Pilot Series	T-A Pro Insert	T-A (-TC) Insert	Part No.	Pilot Series	Pilot Insert	inch	metric
-	2.244	57.00	29/32	25/64	**V5701D-57**	1	TA#1-23.02	1C11H-0029-TC	**V5722D-57**	22	XT#22-23.02	9/16	14.29
2-1/4	2.250	57.15	29/32	25/64	**V5701D-0208**	1	TA#1-23.02	1C11H-0029-TC	**V5722D-0208**	22	XT#22-23.02	9/16	14.29
2-9/32	2.281	57.94	29/32	25/64	**V5701D-0209**	1	TA#1-23.02	1C11H-0029-TC	**V5722D-0209**	22	XT#22-23.02	9/16	14.29
-	2.284	58.00	29/32	25/64	**V5701D-58**	1	TA#1-23.02	1C11H-0029-TC	**V5722D-58**	22	XT#22-23.02	9/16	14.29
2-5/16	2.313	58.74	29/32	25/64	**V5701D-0210**	1	TA#1-23.02	1C11H-0029-TC	**V5722D-0210**	22	XT#22-23.02	9/16	14.29
-	2.323	59.00	15/16	25/64	**V5701D-59**	1	TA#1-23.81	1C11H-0030-TC	**V5722D-59**	22	XT#22-23.81	9/16	14.29
2-11/32	2.344	59.53	15/16	25/64	**V5701D-0211**	1	TA#1-23.81	1C11H-0030-TC	**V5722D-0211**	22	XT#22-23.81	9/16	14.29
-	2.362	60.00	15/16	25/64	**V5701D-60**	1	TA#1-23.81	1C11H-0030-TC	**V5722D-60**	22	XT#22-23.81	9/16	14.29
2-3/8	2.375	60.33	15/16	25/64	**V5701D-0212**	1	TA#1-23.81	1C11H-0030-TC	**V5722D-0212**	22	XT#22-23.81	9/16	14.29
-	2.402	61.00	1	25/64	**V5702D-61**	2	TA#2-25.40	1C12H-0100-TC	**V5724D-61**	24	XT#24-25.40	9/16	14.29
2-13/32	2.406	61.12	1	25/64	**V5702D-0213**	2	TA#2-25.40	1C12H-0100-TC	**V5724D-0213**	24	XT#24-25.40	9/16	14.29
2-7/16	2.438	61.91	1	25/64	**V5702D-0214**	2	TA#2-25.40	1C12H-0100-TC	**V5724D-0214**	24	XT#24-25.40	9/16	14.29
-	2.441	62.00	1-1/16	25/64	**V5702D-62**	2	TA#2-26.99	1C12H-0102-TC	**V5726D-62**	26	XT#26-26.99	9/16	14.29
2-15/32	2.469	62.71	1-1/16	25/64	**V5702D-0215**	2	TA#2-26.99	1C12H-0102-TC	**V5726D-0215**	26	XT#26-26.99	9/16	14.29

#Denotes ISO material/geometry (P= steel, K= cast iron, N= nonferrous).

IC Inserts

Coating	Size inch	Size metric	Grade	Geometry	Part No.	Insert Screw	Insert Driver	Admissible Tightening Torque*
AM300®	9/16	14.29	C5 (P35)	Standard	**OP-090608-PW**	75014-IP20-1	8IP-20	121.0 in-lbs (1370 N-cm)
AM300®	9/16	14.29	C1 (K35)	Standard	**OP-090608-1PW**	75014-IP20-1	8IP-20	121.0 in-lbs (1370 N-cm)
AM300®	9/16	14.29	C2 (K25)	Standard	**OP-090608-2PW**	75014-IP20-1	8IP-20	121.0 in-lbs (1370 N-cm)
AM300®	9/16	14.29	C5 (P35)	High Rake	**OP-090608-PWHR**	75014-IP20-1	8IP-20	121.0 in-lbs (1370 N-cm)

*Tightening torques are calculated with a friction coefficient of μ = 0.14 and develop 90% of ultimate yield strength.

Pilot Accessories

Pilot Style	Series	Insert Screws	Insert Driver	Admissible Tightening Torque*
T-A	1	739-IP9-1	8IP-9	27.0 in-lbs (305 N-cm)
T-A	2	7495-IP15-1	8IP-15	61.0 in-lbs (690 N-cm)
GEN3SYS	22	739-IP9-1	8IP-9	27.0 in-lbs (305 N-cm)
GEN3SYS	24	739-IP9-1	8IP-9	27.0 in-lbs (305 N-cm)
GEN3SYS	26	7495-IP15-1	8IP-15	61.0 in-lbs (690 N-cm)

*Tightening torques are calculated with a friction coefficient of μ = 0.14 and develop 90% of ultimate yield strength.

A50: 28 - 29

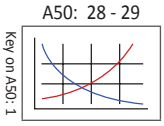

A50: 2 - 5

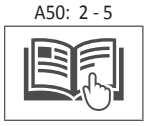

Section A20

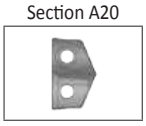

Section A25 & A30

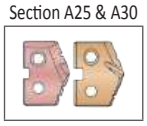

Nonstocked diameters are also available. Follow the examples shown below.

Inch	38 series, T-A (1 series), 1.6790"	Part No. = **V3801D-1.6790**
Metric	38 series, T-A (1 series), 42.15 mm	Part No. = **V3801D-42.15**

IC inserts sold in multiples of 2. | Insert screws sold in multiples of 10.

APX Drill Holders

57 Series | Diameter Range: 2.244" - 2.480" (57.00 mm - 62.99 mm)

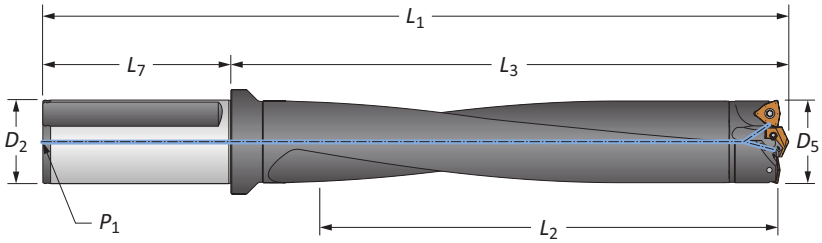

Straight Shank

	Length	D_5	Body L_2	Body L_3	Body L_1	Shank L_7	Shank D_2	Shank P_1	Part No.
i	3xD	2.244 - 2.480	7-1/8	9-35/64	14-1/16	4-1/2	2	1/4 NPT	**W5703H-200F**
i	5xD	2.244 - 2.480	12-3/8	14-33/64	19-1/64	4-1/2	2	1/4 NPT	**W5705H-200F**
i	8xD	2.244 - 2.480	19-3/4	21-31/32	26-15/32	4-1/2	2	1/4 NPT	⚠ **W5708H-200F**
i	10xD	2.244 - 2.480	24-3/4	26-59/64	31-27/64	4-1/2	2	1/4 NPT	⚠ **W5710H-200F**
m	3xD	57.00 - 62.99	179.91	242.70	322.71	80.00	50.00	1/4 BSPT	**W5703H-50FM**
m	5xD	57.00 - 62.99	315.01	368.60	448.59	80.00	50.00	1/4 BSPT	**W5705H-50FM**
m	8xD	57.00 - 62.99	503.90	557.81	637.81	80.00	50.00	1/4 BSPT	⚠ **W5708H-50FM**
m	10xD	57.00 - 62.99	626.90	683.79	763.80	80.00	50.00	1/4 BSPT	⚠ **W5710H-50FM**

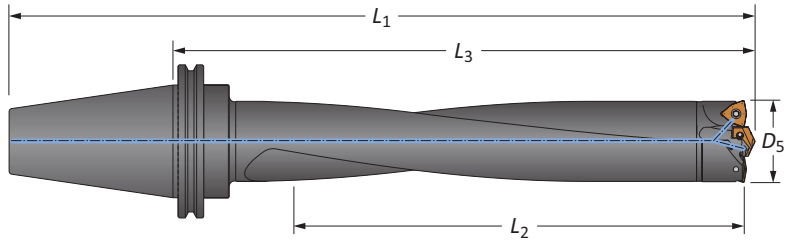

CV50 Shank

	Length	D_5 inch	D_5 mm	Body L_2	Body L_3	Body L_1	Shank	Part No.
i	3xD	2.244 - 2.480	57.00 - 62.99	7-1/8	10-17/32	14-17/32	CV50	**W5703H-CV50**
i	5xD	2.244 - 2.480	57.00 - 62.99	12-3/8	15-31/64	19-31/64	CV50	**W5705H-CV50**
i	8xD	2.244 - 2.480	57.00 - 62.99	19-7/8	22-15/16	26-15/16	CV50	⚠ **W5708H-CV50**
i	10xD	2.244 - 2.480	57.00 - 62.99	24-3/4	27-57/64	31-57/64	CV50	⚠ **W5710H-CV50**

Connection Accessories

Mounting Screw	Mounting Screw Driver	Admissible Tightening Torque*
75020-IP20-1	8IP-20	60 in-lb (678 N-cm)

*Tightening torques are calculated with a friction coefficient of μ = 0.14 and develop 90% of ultimate yield strength.

⚠ **WARNING** Refer to Speed and Feed charts for recommended adjustments to speeds and feeds. Refer to page A50: 30 for deep hole drilling guidelines in this section of the catalog. Visit **www.alliedmachine.com/DeepHoleGuidelines** for the most up-to-date information and procedures. Factory technical assistance is available for your specific applications through our Application Engineering Team.
ext: **7611** | *email:* **appeng@alliedmachine.com**

i = Imperial (in)
m = Metric (mm)
Mounting screws sold in multiples of 4.

APX Drill Heads

63 Series | Diameter Range: 2.480" - 2.756" (63.00 mm - 69.99 mm)

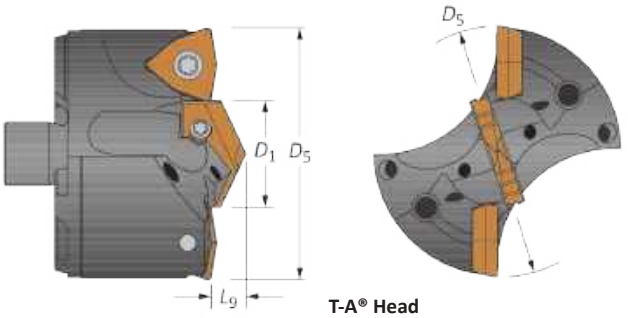

T-A® Head

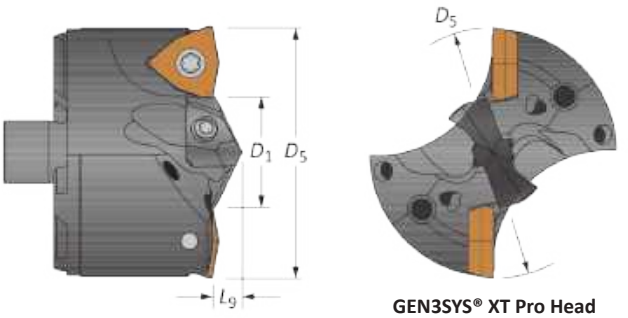

GEN3SYS® XT Pro Head

Heads

Head					T-A Head				GEN3SYS XT Pro Head			IC Insert Size	
D_5 fractional	D_5 inch	D_5 metric	D_1	L_9	Part No.	Pilot Series	T-A Pro Insert	T-A (-TC) Insert	Part No.	Pilot Series	Pilot Insert	inch	metric
-	2.480	63.00	1-1/8	7/16	**V6302D-63**	2	TA#2-28.58	1C12H-0104-TC	**V6326D-63**	26	XT#26-28.58	9/16	14.29
2-1/2	2.500	63.50	1-1/8	7/16	**V6302D-0216**	2	TA#2-28.58	1C12H-0104-TC	**V6326D-0216**	26	XT#26-28.58	9/16	14.29
-	2.520	64.00	1-1/8	7/16	**V6302D-64**	2	TA#2-28.58	1C12H-0104-TC	**V6326D-64**	26	XT#26-28.58	9/16	14.29
2-17/32	2.531	64.29	1-1/8	7/16	**V6302D-0217**	2	TA#2-28.58	1C12H-0104-TC	**V6326D-0217**	26	XT#26-28.58	9/16	14.29
-	2.559	65.00	1-1/8	7/16	**V6302D-65**	2	TA#2-28.58	1C12H-0104-TC	**V6326D-65**	26	XT#26-28.58	9/16	14.29
2-9/16	2.563	65.09	1-3/16	7/16	**V6302D-0218**	2	TA#2-30.16	1C12H-0106-TC	**V6329D-0218**	29	XT#29-30.16	9/16	14.29
2-19/32	2.594	65.88	1-3/16	7/16	**V6302D-0219**	2	TA#2-30.16	1C12H-0106-TC	**V6329D-0219**	29	XT#29-30.16	9/16	14.29
-	2.598	66.00	1-3/16	7/16	**V6302D-66**	2	TA#2-30.16	1C12H-0106-TC	**V6329D-66**	29	XT#29-30.16	9/16	14.29
2-5/8	2.625	66.68	1-3/16	7/16	**V6302D-0220**	2	TA#2-30.16	1C12H-0106-TC	**V6329D-0220**	29	XT#29-30.16	9/16	14.29
-	2.638	67.00	1-1/4	7/16	**V6302D-67**	2	TA#2-31.75	1C12H-0108-TC	**V6329D-67**	29	XT#29-31.75	9/16	14.29
2-21/32	2.656	67.47	1-1/4	7/16	**V6302D-0221**	2	TA#2-31.75	1C12H-0108-TC	**V6329D-0221**	29	XT#29-31.75	9/16	14.29
-	2.677	68.00	1-1/4	7/16	**V6302D-68**	2	TA#2-31.75	1C12H-0108-TC	**V6329D-68**	29	XT#29-31.75	9/16	14.29
2-11/16	2.688	68.26	1-1/4	7/16	**V6302D-0222**	2	TA#2-31.75	1C12H-0108-TC	**V6329D-0222**	29	XT#29-31.75	9/16	14.29
-	2.717	69.00	1-5/16	7/16	**V6302D-69**	2	TA#2-33.34	1C12H-0110-TC	**V6332D-69**	32	XT#32-33.34	9/16	14.29
2-23/32	2.719	69.06	1-5/16	7/16	**V6302D-0223**	2	TA#2-33.34	1C12H-0110-TC	**V6332D-0223**	32	XT#32-33.34	9/16	14.29
2-3/4	2.750	69.85	1-5/16	7/16	**V6302D-0224**	2	TA#2-33.34	1C12H-0110-TC	**V6332D-0224**	32	XT#32-33.34	9/16	14.29

#Denotes ISO material/geometry (P= steel, K= cast iron, N= nonferrous).

IC Inserts

Coating	Size inch	Size metric	Grade	Geometry	Part No.	Insert Screw	Insert Driver	Admissible Tightening Torque*
AM300®	9/16	14.29	C5 (P35)	Standard	**OP-090608-PW**	75014-IP20-1	8IP-20	121.0 in-lbs (1370 N-cm)
AM300®	9/16	14.29	C1 (K35)	Standard	**OP-090608-1PW**	75014-IP20-1	8IP-20	121.0 in-lbs (1370 N-cm)
AM300®	9/16	14.29	C2 (K25)	Standard	**OP-090608-2PW**	75014-IP20-1	8IP-20	121.0 in-lbs (1370 N-cm)
AM300®	9/16	14.29	C5 (P35)	High Rake	**OP-090608-PWHR**	75014-IP20-1	8IP-20	121.0 in-lbs (1370 N-cm)

*Tightening torques are calculated with a friction coefficient of μ = 0.14 and develop 90% of ultimate yield strength.

Pilot Accessories

Pilot Style	Series	Insert Screws	Insert Driver	Admissible Tightening Torque*
T-A	2	7495-IP15-1	8IP-15	61.0 in-lbs (690 N-cm)
GEN3SYS	26	7495-IP15-1	8IP-15	61.0 in-lbs (690 N-cm)
GEN3SYS	29	7495-IP15-1	8IP-15	61.0 in-lbs (690 N-cm)
GEN3SYS	32	7495-IP15-1	8IP-15	61.0 in-lbs (690 N-cm)

*Tightening torques are calculated with a friction coefficient of μ = 0.14 and develop 90% of ultimate yield strength.

A50: 28 - 29 | A50: 2 - 5 | Section A20 | Section A25 & A30

Key on A50: 1

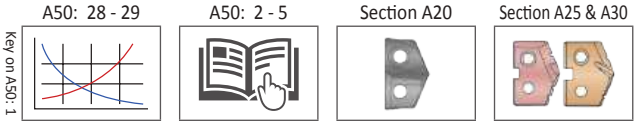

Nonstocked diameters are also available. Follow the examples shown below.

Inch	38 series, T-A (1 series), 1.6790"	Part No. = **V3801D-1.6790**
Metric	38 series, T-A (1 series), 42.15 mm	Part No. = **V3801D-42.15**

IC inserts sold in multiples of 2. | Insert screws sold in multiples of 10.

APX Drill Holders

63 Series | Diameter Range: 2.480" - 2.756" (63.00 mm - 69.99 mm)

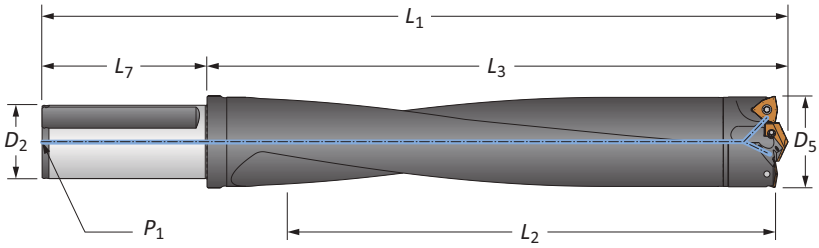

Straight Shank

	Length	D_5	Body L_2	Body L_3	Body L_1	Shank L_7	Shank D_2	Shank P_1	Part No.
i	3xD	2.480 - 2.756	7-7/8	10-11/32	14-27/32	4-1/2	2	1/4 NPT	**W6303H-200F**
i	5xD	2.480 - 2.756	13-3/4	15-27/32	20-11/32	4-1/2	2	1/4 NPT	**W6305H-200F**
i	8xD	2.480 - 2.756	22-1/8	24-1/8	28-5/8	4-1/2	2	1/4 NPT	⚠ **W6308H-200F**
i	10xD	2.480 - 2.756	27-1/8	29-11/64	33-43/64	4-1/2	2	1/4 NPT	⚠ **W6310H-200F**
m	3xD	63.00 - 69.99	200.81	262.61	342.60	80.00	50.00	1/4 BSPT	**W6303H-50FM**
m	5xD	63.00 - 69.99	350.00	402.59	482.60	80.00	50.00	1/4 BSPT	**W6305H-50FM**
m	8xD	63.00 - 69.99	559.99	612.60	692.61	80.00	50.00	1/4 BSPT	⚠ **W6308H-50FM**
m	10xD	63.00 - 69.99	688.29	740.89	820.90	80.00	50.00	1/4 BSPT	⚠ **W6310H-50FM**

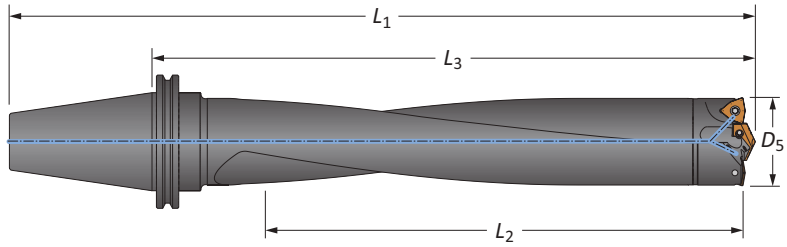

CV50 Shank

	Length	D_5 inch	D_5 mm	Body L_2	Body L_3	Body L_1	Shank	Part No.
i	3xD	2.480 - 2.756	63.00 - 69.99	7-7/8	11-7/16	15-7/16	CV50	**W6303H-CV50**
i	5xD	2.480 - 2.756	63.00 - 69.99	13-3/4	16-15/16	20-15/16	CV50	**W6305H-CV50**
i	8xD	2.480 - 2.756	63.00 - 69.99	22	25-13/64	29-13/64	CV50	⚠ **W6308H-CV50**
i	10xD	2.480 - 2.756	63.00 - 69.99	26-1/2	29-43/64	33-43/64	CV50	⚠ **W6310H-CV50**

Connection Accessories

Mounting Screw	Mounting Screw Driver	Admissible Tightening Torque*
75020-IP20-1	8IP-20	60 in-lb (678 N-cm)

*Tightening torques are calculated with a friction coefficient of μ = 0.14 and develop 90% of ultimate yield strength.

⚠ **WARNING** Refer to Speed and Feed charts for recommended adjustments to speeds and feeds. Refer to page A50: 30 for deep hole drilling guidelines in this section of the catalog. Visit **www.alliedmachine.com/DeepHoleGuidelines** for the most up-to-date information and procedures. Factory technical assistance is available for your specific applications through our Application Engineering Team.
ext: **7611** | *email:* **appeng@alliedmachine.com**

i = Imperial (in)
m = Metric (mm)
Mounting screws sold in multiples of 4.

APX Drill Heads

70 Series | Diameter Range: 2.756" - 2.992" (70.00 mm - 75.99 mm)

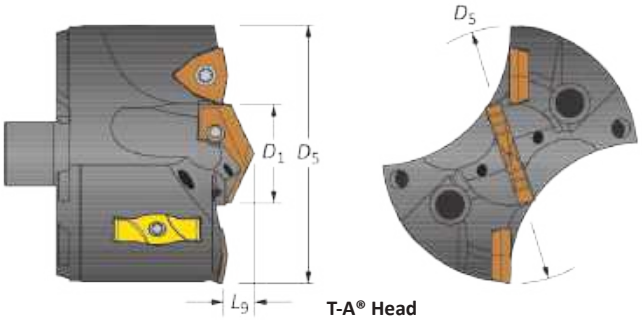

T-A® Head

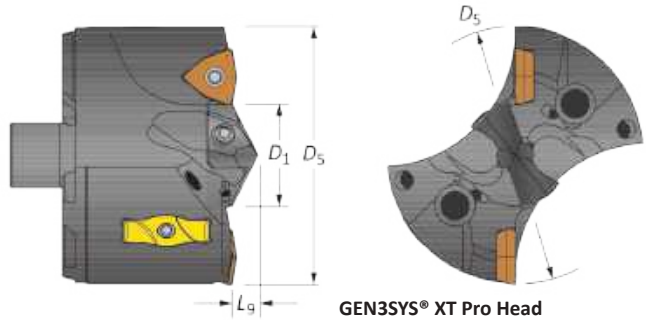

GEN3SYS® XT Pro Head

Heads

Head					T-A Head				GEN3SYS XT Pro Head			IC Insert Size	
D_5 fractional	D_5 inch	D_5 metric	D_1	L_9	Part No.	Pilot Series	T-A Pro Insert	T-A (-TC) Insert	Part No.	Pilot Series	Pilot Insert	inch	metric
-	2.756	70.00	1-7/32	25/64	**V7002S-70**	2	TA#2-30.96	1C12H-0107-TC	**V7029S-70**	29	XT#29-30.96	3/8	9.53
2-13/16	2.813	71.44	1-7/32	25/64	**V7002S-0226**	2	TA#2-30.96	1C12H-0107-TC	**V7029S-0226**	29	XT#29-30.96	3/8	9.53
-	2.835	72.00	1-7/32	25/64	**V7002S-72**	2	TA#2-30.96	1C12H-0107-TC	**V7029S-72**	29	XT#29-30.96	3/8	9.53
2-7/8	2.875	73.03	1-7/32	25/64	**V7002S-0228**	2	TA#2-30.96	1C12H-0107-TC	**V7029S-0228**	29	XT#29-30.96	3/8	9.53
-	2.913	74.00	1-7/32	25/64	**V7002S-74**	2	TA#2-30.96	1C12H-0107-TC	**V7029S-74**	29	XT#29-30.96	3/8	9.53
2-15/16	2.938	74.61	1-7/32	25/64	**V7002S-0230**	2	TA#2-30.96	1C12H-0107-TC	**V7029S-0230**	29	XT#29-30.96	3/8	9.53

#Denotes ISO material/geometry (P= steel, K= cast iron, N= nonferrous).

IC Inserts

Coating	Size inch	Size metric	Grade	Geometry	Part No.	Insert Screw	Insert Driver	Admissible Tightening Torque*
AM300®	3/8	9.53	C5 (P35)	Standard	**OP-060408-PW**	73595-IP15-1	8IP-15	41.0 in-lbs (465 N-cm)
AM300®	3/8	9.53	C1 (K35)	Standard	**OP-060408-1PW**	73595-IP15-1	8IP-15	41.0 in-lbs (465 N-cm)
AM300®	3/8	9.53	C2 (K25)	Standard	**OP-060408-2PW**	73595-IP15-1	8IP-15	41.0 in-lbs (465 N-cm)
AM300®	3/8	9.53	C5 (P35)	High Rake	**OP-060408-PWHR**	73595-IP15-1	8IP-15	41.0 in-lbs (465 N-cm)

*Tightening torques are calculated with a friction coefficient of μ = 0.14 and develop 90% of ultimate yield strength.

Wear Pads

Part No.	Wear Pad Screw	Wear Pad Driver	Admissible Tightening Torque*
WP7095	7358-IP10-1	8IP-10	27.0 in-lbs (300 N-cm)

*Tightening torques are calculated with a friction coefficient of μ = 0.14 and develop 90% of ultimate yield strength.
NOTE: Wear pads included with head.

Pilot Accessories

Pilot Style	Series	Insert Screws	Insert Driver	Admissible Tightening Torque*
T-A	2	7495-IP15-1	8IP-15	61.0 in-lbs (690 N-cm)
GEN3SYS	29	7495-IP15-1	8IP-15	61.0 in-lbs (690 N-cm)

*Tightening torques are calculated with a friction coefficient of μ = 0.14 and develop 90% of ultimate yield strength.

Key on A50: 1

A50: 28 - 29

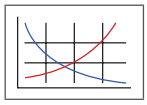

A50: 2 - 5

Section A20

Section A25 & A30

Nonstocked diameters are also available. Follow the examples shown below.

Inch	38 series, T-A (1 series), 1.6790"	Part No. = **V3801D-1.6790**
Metric	38 series, T-A (1 series), 42.15 mm	Part No. = **V3801D-42.15**

Wear pads sold in multiples of 2. | Wear pad screws sold in multiples of 4.
IC inserts sold in multiples of 2. | Insert screws sold in multiples of 10.

APX Drill Holders

70 Series | Diameter Range: 2.756" - 2.992" (70.00 mm - 75.99 mm)

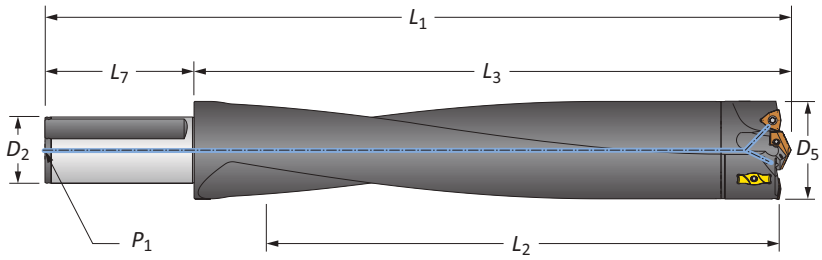

Straight Shank

	Length	D_5	Body L_2	Body L_3	Body L_1	Shank L_7	Shank D_2	Shank P_1	Part No.
i	3xD	2.756 - 2.992	8-3/4	10-19/32	15-3/32	4-1/2	2	1/4 NPT	**W7003H-200F**
	5xD	2.756 - 2.992	14-7/8	16-37/64	21-5/64	4-1/2	2	1/4 NPT	**W7005H-200F**
	8xD	2.756 - 2.992	23-7/8	25-35/64	30-3/64	4-1/2	2	1/4 NPT	⚠ **W7008H-200F**
	10xD	2.756 - 2.992	27-7/8	29-35/64	34-3/64	4-1/2	2	1/4 NPT	⚠ **W7010H-200F**
m	3xD	70.00 - 75.99	218.80	269.01	349.00	80.00	50.00	1/4 BSPT	**W7003H-50FM**
	5xD	70.00 - 75.99	380.01	421.11	501.09	80.00	50.00	1/4 BSPT	**W7005H-50FM**
	8xD	70.00 - 75.99	608.00	649.00	729.01	80.00	50.00	1/4 BSPT	⚠ **W7008H-50FM**
	10xD	70.00 - 75.99	709.40	750.29	830.30	80.00	50.00	1/4 BSPT	⚠ **W7010H-50FM**

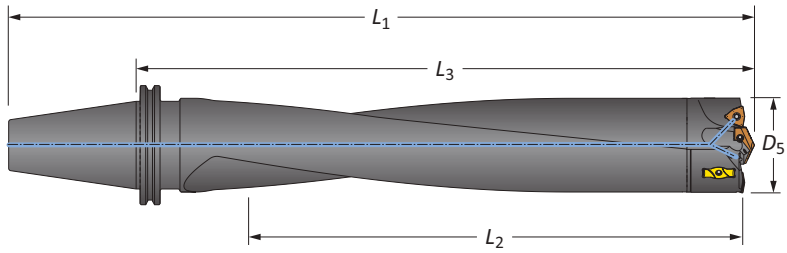

CV50 Shank

	Length	D_5 inch	D_5 mm	Body L_2	Body L_3	Body L_1	Shank	Part No.
i	3xD	2.756 - 2.992	70.00 - 75.99	8-3/4	12-7/32	16-7/32	CV50	**W7003H-CV50**
	5xD	2.756 - 2.992	70.00 - 75.99	14-7/8	18-13/64	22-13/64	CV50	**W7005H-CV50**
	8xD	2.756 - 2.992	70.00 - 75.99	23-7/8	27-5/32	31-5/32	CV50	⚠ **W7008H-CV50**
	10xD	2.756 - 2.992	70.00 - 75.99	26-3/4	29-61/64	33-61/64	CV50	⚠ **W7010H-CV50**

Connection Accessories

Mounting Screw	Mounting Screw Bit	Admissible Tightening Torque*
78027-IP30-1	8IP-30B	250 in-lb (2825 N-cm)

*Tightening torques are calculated with a friction coefficient of μ = 0.14 and develop 90% of ultimate yield strength.

⚠ **WARNING** Refer to Speed and Feed charts for recommended adjustments to speeds and feeds. Refer to page A50: 30 for deep hole drilling guidelines in this section of the catalog. Visit **www.alliedmachine.com/DeepHoleGuidelines** for the most up-to-date information and procedures. Factory technical assistance is available for your specific applications through our Application Engineering Team.
ext: **7611** | *email:* **appeng@alliedmachine.com**

i = Imperial (in)
m = Metric (mm)
Mounting screws sold in multiples of 4.

APX Drill Heads

76 Series | Diameter Range: 2.992" - 3.268" (76.00 mm - 82.99 mm)

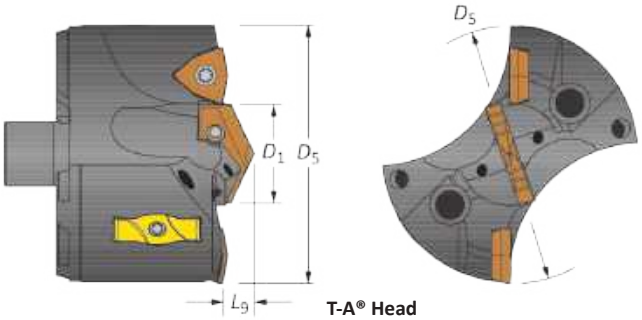

T-A® Head

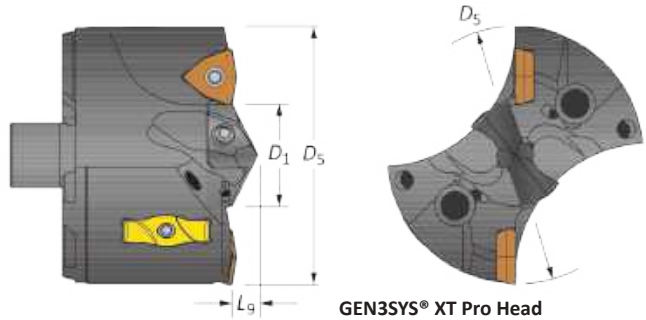

GEN3SYS® XT Pro Head

Heads

Head					T-A Head				GEN3SYS XT Pro Head			IC Insert Size	
D_5 fractional	D_5 inch	D_5 metric	D_1	L_9	Part No.	Pilot Series	T-A Pro Insert	T-A (-TC) Insert	Part No.	Pilot Series	Pilot Insert	inch	metric
-	2.992	76.00	1-7/32	13/32	**V7602S-76**	2	TA#2-30.96	1C12H-0107-TC	**V7629S-76**	29	XT#29-30.96	1/2	12.70
3	3.000	76.20	1-7/32	13/32	**V7602S-0300**	2	TA#2-30.96	1C12H-0107-TC	**V7629S-0300**	29	XT#29-30.96	1/2	12.70
3-1/16	3.063	77.79	1-7/32	13/32	**V7602S-0302**	2	TA#2-30.96	1C12H-0107-TC	**V7629S-0302**	29	XT#29-30.96	1/2	12.70
-	3.071	78.00	1-7/32	13/32	**V7602S-78**	2	TA#2-30.96	1C12H-0107-TC	**V7629S-78**	29	XT#29-30.96	1/2	12.70
3-1/8	3.125	79.38	1-7/32	13/32	**V7602S-0304**	2	TA#2-30.96	1C12H-0107-TC	**V7629S-0304**	29	XT#29-30.96	1/2	12.70
-	3.150	80.00	1-7/32	13/32	**V7602S-80**	2	TA#2-30.96	1C12H-0107-TC	**V7629S-80**	29	XT#29-30.96	1/2	12.70
3-3/16	3.188	80.96	1-7/32	13/32	**V7602S-0306**	2	TA#2-30.96	1C12H-0107-TC	**V7629S-0306**	29	XT#29-30.96	1/2	12.70
-	3.228	82.00	1-7/32	13/32	**V7602S-82**	2	TA#2-30.96	1C12H-0107-TC	**V7629S-82**	29	XT#29-30.96	1/2	12.70
3-1/4	3.250	82.55	1-7/32	13/32	**V7602S-0308**	2	TA#2-30.96	1C12H-0107-TC	**V7629S-0308**	29	XT#29-30.96	1/2	12.70

#Denotes ISO material/geometry (P= steel, K= cast iron, N= nonferrous).

IC Inserts

Coating	Size inch	Size metric	Grade	Geometry	Part No.	Insert Screw	Insert Driver	Admissible Tightening Torque*
AM300®	1/2	12.70	C5 (P35)	Standard	**OP-080508-PW**	74012-IP15-1	8IP-15	61.0 in-lbs (690 N-cm)
AM300®	1/2	12.70	C1 (K35)	Standard	**OP-080508-1PW**	74012-IP15-1	8IP-15	61.0 in-lbs (690 N-cm)
AM300®	1/2	12.70	C2 (K25)	Standard	**OP-080508-2PW**	74012-IP15-1	8IP-15	61.0 in-lbs (690 N-cm)
AM300®	1/2	12.70	C5 (P35)	High Rake	**OP-080508-PWHR**	74012-IP15-1	8IP-15	61.0 in-lbs (690 N-cm)

*Tightening torques are calculated with a friction coefficient of μ = 0.14 and develop 90% of ultimate yield strength.

Wear Pads

Part No.	Wear Pad Screw	Wear Pad Driver	Admissible Tightening Torque*
WP7095	7358-IP10-1	8IP-10	27.0 in-lbs (300 N-cm)

*Tightening torques are calculated with a friction coefficient of μ = 0.14 and develop 90% of ultimate yield strength.
NOTE: Wear pads included with head.

Pilot Accessories

Pilot Style	Series	Insert Screws	Insert Driver	Admissible Tightening Torque*
T-A	2	7495-IP15-1	8IP-15	61.0 in-lbs (690 N-cm)
GEN3SYS	29	7495-IP15-1	8IP-15	61.0 in-lbs (690 N-cm)

*Tightening torques are calculated with a friction coefficient of μ = 0.14 and develop 90% of ultimate yield strength.

A50: 28 - 29
Key on A50: 1
A50: 2 - 5
Section A20
Section A25 & A30

Nonstocked diameters are also available. Follow the examples shown below.

Inch	38 series, T-A (1 series), 1.6790"	Part No. = **V3801D-1.6790**
Metric	38 series, T-A (1 series), 42.15 mm	Part No. = **V3801D-42.15**

Wear pads sold in multiples of 2. | Wear pad screws sold in multiples of 4.
IC inserts sold in multiples of 2. | Insert screws sold in multiples of 10.

APX Drill Holders

76 Series | Diameter Range: 2.992" - 3.268" (76.00 mm - 82.99 mm)

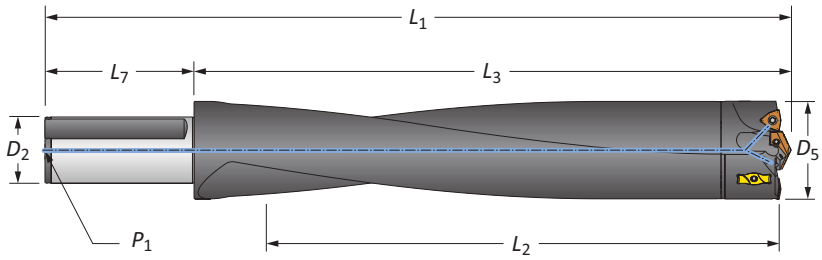

Straight Shank

	Length	D_5	Body L_2	Body L_3	Body L_1	Shank L_7	Shank D_2	Shank P_1	Part No.
i	3xD	2.992 - 3.268	9-1/2	11-33/64	16-1/64	4-1/2	2	1/4 NPT	**W7603H-200F**
i	5xD	2.992 - 3.268	16-3/8	18-3/64	22-35/64	4-1/2	2	1/4 NPT	**W7605H-200F**
i	8xD	2.992 - 3.268	26-1/8	27-27/32	32-11/32	4-1/2	2	1/4 NPT	⚠ **W7608H-200F**
i	10xD	2.992 - 3.268	32-15/16	34-25/64	38-7/8	4-1/2	2	1/4 NPT	⚠ **W7610H-200F**
m	3xD	76.00 - 82.99	240.00	292.40	372.39	80.00	50.00	1/4 BSPT	**W7603H-50FM**
m	5xD	76.00 - 82.99	415.01	421.11	501.09	80.00	50.00	1/4 BSPT	**W7605H-50FM**
m	8xD	76.00 - 82.99	664.01	648.69	728.70	80.00	50.00	1/4 BSPT	⚠ **W7608H-50FM**
m	10xD	76.00 - 82.99	836.58	873.38	953.38	80.00	50.00	1/4 BSPT	⚠ **W7610H-50FM**

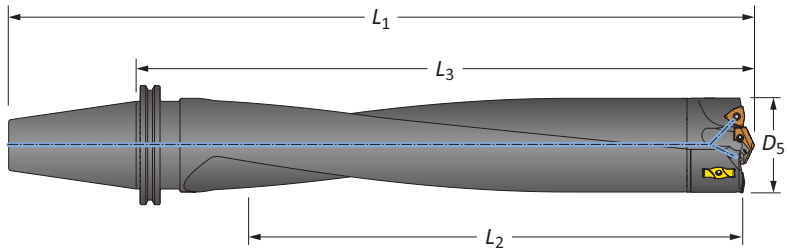

CV50 Shank

	Length	D_5 inch	D_5 mm	Body L_2	Body L_3	Body L_1	Shank	Part No.
i	3xD	2.992 - 3.268	76.00 - 82.99	9-1/2	12-57/64	16-57/64	CV50	**W7603H-CV50**
i	5xD	2.992 - 3.268	76.00 - 82.99	16-3/8	19-27/64	23-27/64	CV50	**W7605H-CV50**
i	8xD	2.992 - 3.268	76.00 - 82.99	26-1/8	29-7/32	33-7/32	CV50	⚠ **W7608H-CV50**
i	10xD	2.992 - 3.268	76.00 - 82.99	32-15/16	35-41/64	39-49/64	CV50	⚠ **W7610H-CV50**

Connection Accessories

Mounting Screw	Mounting Screw Bit	Admissible Tightening Torque*
78027-IP30-1	8IP-30B	250 in-lb (2825 N-cm)

*Tightening torques are calculated with a friction coefficient of μ = 0.14 and develop 90% of ultimate yield strength.

⚠ WARNING Refer to Speed and Feed charts for recommended adjustments to speeds and feeds. Refer to page A50: 30 for deep hole drilling guidelines in this section of the catalog. Visit **www.alliedmachine.com/DeepHoleGuidelines** for the most up-to-date information and procedures. Factory technical assistance is available for your specific applications through our Application Engineering Team.
ext: **7611** | *email:* **appeng@alliedmachine.com**

i = Imperial (in)
m = Metric (mm)
Mounting screws sold in multiples of 4.

APX Drill Heads

83 Series | Diameter Range: 3.268" - 3.504" (83.00 mm - 88.99 mm)

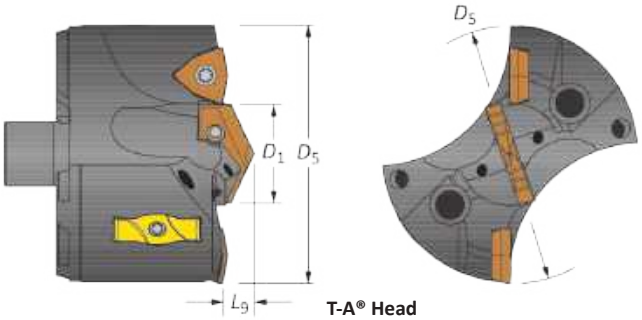

T-A® Head

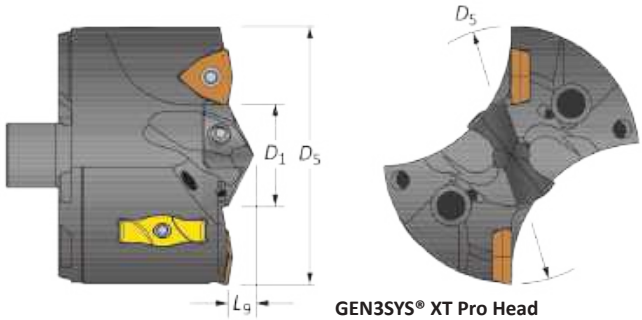

GEN3SYS® XT Pro Head

Heads

Head					T-A Head				GEN3SYS XT Pro Head			IC Insert Size	
D_5 fractional	D_5 inch	D_5 metric	D_1	L_9	Part No.	Pilot Series	T-A Pro Insert	T-A (-TC) Insert	Part No.	Pilot Series	Pilot Insert	inch	metric
-	3.307	84.00	1-3/8	7/16	**V8302S-84**	2	TA#2-34.93	1C12H-0112-TC	**V8332S-84**	32	XT#32-34.93	1/2	12.70
3-5/16	3.313	84.14	1-3/8	7/16	**V8302S-0310**	2	TA#2-34.93	1C12H-0112-TC	**V8332S-0310**	32	XT#32-34.93	1/2	12.70
3-3/8	3.375	85.73	1-3/8	7/16	**V8302S-0312**	2	TA#2-34.93	1C12H-0112-TC	**V8332S-0312**	32	XT#32-34.93	1/2	12.70
-	3.386	86.00	1-3/8	7/16	**V8302S-86**	2	TA#2-34.93	1C12H-0112-TC	**V8332S-86**	32	XT#32-34.93	1/2	12.70
3-7/16	3.438	87.31	1-3/8	7/16	**V8302S-0314**	2	TA#2-34.93	1C12H-0112-TC	**V8332S-0314**	32	XT#32-34.93	1/2	12.70
-	3.465	88.00	1-3/8	7/16	**V8302S-88**	2	TA#2-34.93	1C12H-0112-TC	**V8332S-88**	32	XT#32-34.93	1/2	12.70
3-1/2	3.500	88.90	1-3/8	7/16	**V8302S-0316**	2	TA#2-34.93	1C12H-0112-TC	**V8332S-0316**	32	XT#32-34.93	1/2	12.70

#Denotes ISO material/geometry (P= steel, K= cast iron, N= nonferrous).

IC Inserts

Coating	Size inch	Size metric	Grade	Geometry	Part No.	Insert Screw	Insert Driver	Admissible Tightening Torque*
AM300®	1/2	12.70	C5 (P35)	Standard	**OP-080508-PW**	74012-IP15-1	8IP-15	61.0 in-lbs (690 N-cm)
AM300®	1/2	12.70	C1 (K35)	Standard	**OP-080508-1PW**	74012-IP15-1	8IP-15	61.0 in-lbs (690 N-cm)
AM300®	1/2	12.70	C2 (K25)	Standard	**OP-080508-2PW**	74012-IP15-1	8IP-15	61.0 in-lbs (690 N-cm)
AM300®	1/2	12.70	C5 (P35)	High Rake	**OP-080508-PWHR**	74012-IP15-1	8IP-15	61.0 in-lbs (690 N-cm)

*Tightening torques are calculated with a friction coefficient of μ = 0.14 and develop 90% of ultimate yield strength.

Wear Pads

Part No.	Wear Pad Screw	Wear Pad Driver	Admissible Tightening Torque*
WP7095	7358-IP10-1	8IP-10	27.0 in-lbs (300 N-cm)

*Tightening torques are calculated with a friction coefficient of μ = 0.14 and develop 90% of ultimate yield strength.
NOTE: Wear pads included with head.

Pilot Accessories

Pilot Style	Series	Insert Screws	Insert Driver	Admissible Tightening Torque*
T-A	2	7495-IP15-1	8IP-15	61.0 in-lbs (690 N-cm)
GEN3SYS	32	7495-IP15-1	8IP-15	61.0 in-lbs (690 N-cm)

*Tightening torques are calculated with a friction coefficient of μ = 0.14 and develop 90% of ultimate yield strength.

A50: 28 - 29 | A50: 2 - 5 | Section A20 | Section A25 & A30

Key on A50: 1

Nonstocked diameters are also available. Follow the examples shown below.

Inch	38 series, T-A (1 series), 1.6790"	Part No. = **V3801D-1.6790**
Metric	38 series, T-A (1 series), 42.15 mm	Part No. = **V3801D-42.15**

Wear pads sold in multiples of 2. | Wear pad screws sold in multiples of 4.
IC inserts sold in multiples of 2. | Insert screws sold in multiples of 10.

APX Drill Holders

83 Series | Diameter Range: 3.268" - 3.504" (83.00 mm - 88.99 mm)

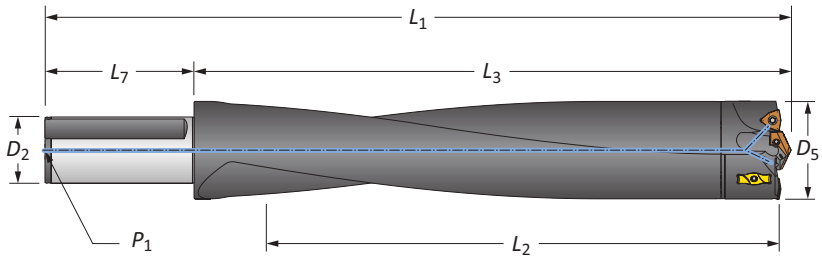

Straight Shank

	Length	D_5	Body L_2	Body L_3	Body L_1	Shank L_7	Shank D_2	Shank P_1	Part No.
i	3xD	3.268 - 3.504	10-1/8	12-5/16	16-13/16	4-1/2	2	1/4 NPT	**W8303H-200F**
i	5xD	3.268 - 3.504	17-1/2	19-5/16	23-13/16	4-1/2	2	1/4 NPT	**W8305H-200F**
i	8xD	3.268 - 3.504	27-3/4	29-35/64	34-3/64	4-1/2	2	1/4 NPT	⚠ **W8308H-200F**
i	10xD	3.268 - 3.504	35-1/4	36-53/64	41-21/64	4-1/2	2	1/4 NPT	⚠ **W8310H-200F**
m	3xD	83.00 - 88.99	257.81	312.50	392.61	80.00	50.00	1/4 BSPT	**W8303H-50FM**
m	5xD	83.00 - 88.99	445.00	490.50	570.51	80.00	50.00	1/4 BSPT	**W8305H-50FM**
m	8xD	83.00 - 88.99	704.90	750.29	830.30	80.00	50.00	1/4 BSPT	⚠ **W8308H-50FM**
m	10xD	83.00 - 88.99	895.51	935.42	1015.42	80.00	50.00	1/4 BSPT	⚠ **W8310H-50FM**

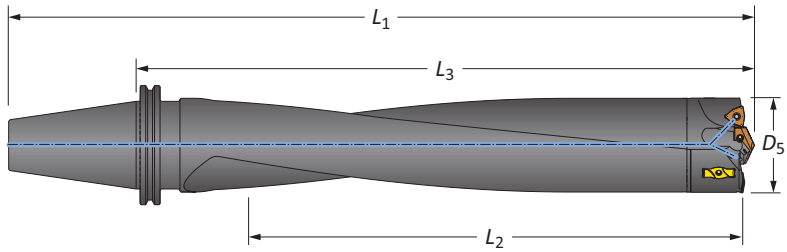

CV50 Shank

	Length	D_5 inch	D_5 mm	Body L_2	Body L_3	Body L_1	Shank	Part No.
i	3xD	3.268 - 3.504	83.00 - 88.99	10-1/8	13-11/16	17-11/16	CV50	**W8303H-CV50**
i	5xD	3.268 - 3.504	83.00 - 88.99	17-1/2	20-11/16	24-11/16	CV50	**W8305H-CV50**
i	8xD	3.268 - 3.504	83.00 - 88.99	26-7/8	30-3/64	34-3/64	CV50	⚠ **W8308H-CV50**
i	10xD	3.268 - 3.504	83.00 - 88.99	35-1/4	38-5/64	42-7/32	CV50	⚠ **W8310H-CV50**

Connection Accessories

Mounting Screw	Mounting Screw Bit	Admissible Tightening Torque*
78027-IP30-1	8IP-30B	250 in-lb (2825 N-cm)

*Tightening torques are calculated with a friction coefficient of μ = 0.14 and develop 90% of ultimate yield strength.

⚠ **WARNING** Refer to Speed and Feed charts for recommended adjustments to speeds and feeds. Refer to page A50: 30 for deep hole drilling guidelines in this section of the catalog. Visit **www.alliedmachine.com/DeepHoleGuidelines** for the most up-to-date information and procedures. Factory technical assistance is available for your specific applications through our Application Engineering Team.
ext: **7611** | *email:* **appeng@alliedmachine.com**

i = Imperial (in)
m = Metric (mm)
Mounting screws sold in multiples of 4.

APX Drill Heads

89 Series | Diameter Range: 3.504" - 3.740" (89.00 mm - 94.99 mm)

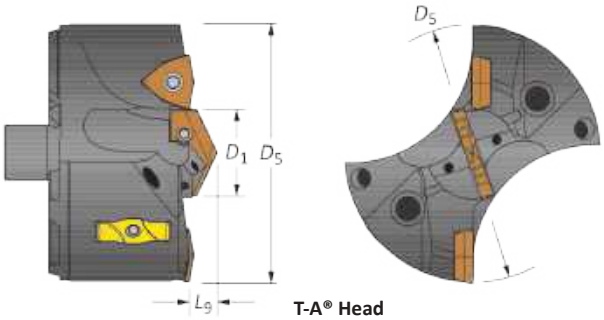

T-A® Head

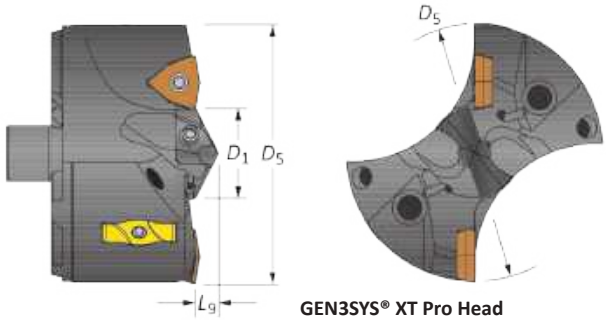

GEN3SYS® XT Pro Head

Heads

Head					T-A Head				GEN3SYS XT Pro Head			IC Insert Size	
D_5 fractional	D_5 inch	D_5 metric	D_1	L_9	Part No.	Pilot Series	T-A Pro Insert	T-A (-TC) Insert	Part No.	Pilot Series	Pilot Insert	inch	metric
-	3.543	90.00	1-1/4	27/64	**V8902S-90**	2	TA#2-31.75	1C12H-0108-TC	**V8929S-90**	29	XT#29-31.75	9/16	14.29
3-9/16	3.563	90.49	1-1/4	27/64	**V8902S-0318**	2	TA#2-31.75	1C12H-0108-TC	**V8929S-0318**	29	XT#29-31.75	9/16	14.29
-	3.622	92.00	1-1/4	27/64	**V8902S-92**	2	TA#2-31.75	1C12H-0108-TC	**V8929S-92**	29	XT#29-31.75	9/16	14.29
3-5/8	3.625	92.08	1-1/4	27/64	**V8902S-0320**	2	TA#2-31.75	1C12H-0108-TC	**V8929S-0320**	29	XT#29-31.75	9/16	14.29
3-11/16	3.688	93.66	1-1/4	27/64	**V8902S-0322**	2	TA#2-31.75	1C12H-0108-TC	**V8929S-0322**	29	XT#29-31.75	9/16	14.29
-	3.701	94.00	1-1/4	27/64	**V8902S-94**	2	TA#2-31.75	1C12H-0108-TC	**V8929S-94**	29	XT#29-31.75	9/16	14.29

#Denotes ISO material/geometry (P= steel, K= cast iron, N= nonferrous).

IC Inserts

Coating	Size inch	Size metric	Grade	Geometry	Part No.	Insert Screw	Insert Driver	Admissible Tightening Torque*
AM300®	9/16	14.29	C5 (P35)	Standard	**OP-090608-PW**	75014-IP20-1	8IP-20	121.0 in-lbs (1370 N-cm)
AM300®	9/16	14.29	C1 (K35)	Standard	**OP-090608-1PW**	75014-IP20-1	8IP-20	121.0 in-lbs (1370 N-cm)
AM300®	9/16	14.29	C2 (K25)	Standard	**OP-090608-2PW**	75014-IP20-1	8IP-20	121.0 in-lbs (1370 N-cm)
AM300®	9/16	14.29	C5 (P35)	High Rake	**OP-090608-PWHR**	75014-IP20-1	8IP-20	121.0 in-lbs (1370 N-cm)

*Tightening torques are calculated with a friction coefficient of μ = 0.14 and develop 90% of ultimate yield strength.

Wear Pads

Part No.	Wear Pad Screw	Wear Pad Driver	Admissible Tightening Torque*
WP7095	7358-IP10-1	8IP-10	27.0 in-lbs (300 N-cm)

*Tightening torques are calculated with a friction coefficient of μ = 0.14 and develop 90% of ultimate yield strength.
NOTE: Wear pads included with head.

Pilot Accessories

Pilot Style	Series	Insert Screws	Insert Driver	Admissible Tightening Torque*
T-A	2	7495-IP15-1	8IP-15	61.0 in-lbs (690 N-cm)
GEN3SYS	29	7495-IP15-1	8IP-15	61.0 in-lbs (690 N-cm)

*Tightening torques are calculated with a friction coefficient of μ = 0.14 and develop 90% of ultimate yield strength.

A50: 28 - 29
Key on A50: 1
A50: 2 - 5
Section A20
Section A25 & A30

Nonstocked diameters are also available. Follow the examples shown below.

Inch	38 series, T-A (1 series), 1.6790"	Part No. = **V3801D-1.6790**
Metric	38 series, T-A (1 series), 42.15 mm	Part No. = **V3801D-42.15**

Wear pads sold in multiples of 2. | Wear pad screws sold in multiples of 4.
IC inserts sold in multiples of 2. | Insert screws sold in multiples of 10.

APX Drill Holders

89 Series | Diameter Range: 3.504" - 3.740" (89.00 mm - 94.99 mm)

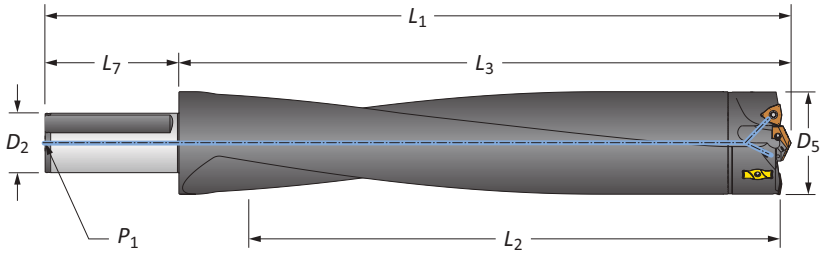

Straight Shank

	Length	D_5	Body L_2	Body L_3	Body L_1	Shank L_7	Shank D_2	Shank P_1	Part No.
i	3xD	3.504 - 3.740	10-7/8	13-1/8	17-5/8	4-1/2	2	1/4 NPT	**W8903H-200F**
i	5xD	3.504 - 3.740	18-5/8	20-5/8	25-1/8	4-1/2	2	1/4 NPT	**W8905H-200F**
i	8xD	3.504 - 3.740	27-5/8	29-35/64	34-3/64	4-1/2	2	1/4 NPT	⚠ **W8908H-200F**
i	10xD	3.504 - 3.740	35-31/32	37-5/8	42-9/64	4-1/2	2	1/4 NPT	⚠ **W8910H-200F**
m	3xD	89.00 - 94.99	275.79	333.60	413.59	80.00	50.00	1/4 BSPT	**W8903H-50FM**
m	5xD	89.00 - 94.99	475.01	523.70	603.71	80.00	50.00	1/4 BSPT	**W8905H-50FM**
m	8xD	89.00 - 94.99	701.80	750.29	830.30	80.00	50.00	1/4 BSPT	⚠ **W8908H-50FM**
m	10xD	89.00 - 94.99	956.27	955.85	1035.85	80.00	50.00	1/4 BSPT	⚠ **W8910H-50FM**

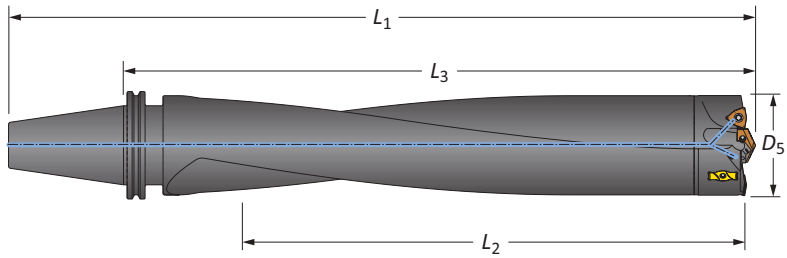

CV50 Shank

	Length	D_5 inch	D_5 mm	Body L_2	Body L_3	Body L_1	Shank	Part No.
i	3xD	3.504 - 3.740	89.00 - 94.99	10-7/8	14-33/64	18-33/64	CV50	**W8903H-CV50**
i	5xD	3.504 - 3.740	89.00 - 94.99	18-5/8	22	26	CV50	**W8905H-CV50**
i	8xD	3.504 - 3.740	89.00 - 94.99	26-3/4	30-1/32	34-1/32	CV50	⚠ **W8908H-CV50**
i	10xD	3.504 - 3.740	89.00 - 94.99	35-31/32	38-7/8	43	CV50	⚠ **W8910H-CV50**

Connection Accessories

Mounting Screw	Mounting Screw Bit	Admissible Tightening Torque*
78027-IP30-1	8IP-30B	250 in-lb (2825 N-cm)

*Tightening torques are calculated with a friction coefficient of μ = 0.14 and develop 90% of ultimate yield strength.

⚠ **WARNING** Refer to Speed and Feed charts for recommended adjustments to speeds and feeds. Refer to page A50: 30 for deep hole drilling guidelines in this section of the catalog. Visit **www.alliedmachine.com/DeepHoleGuidelines** for the most up-to-date information and procedures. Factory technical assistance is available for your specific applications through our Application Engineering Team.
ext: **7611** | *email:* **appeng@alliedmachine.com**

i = Imperial (in)
m = Metric (mm)
Mounting screws sold in multiples of 4.

APX Drill Heads

95 Series | Diameter Range: 3.740" - 4.000" (95.00 mm - 101.60 mm)

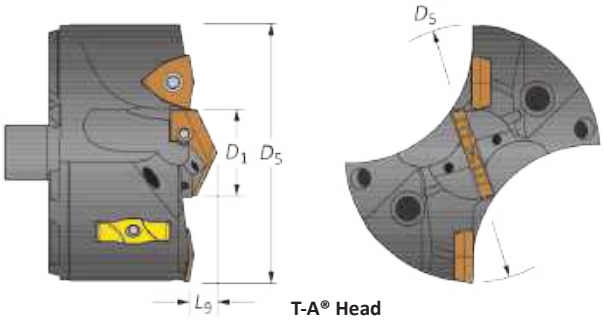

T-A® Head

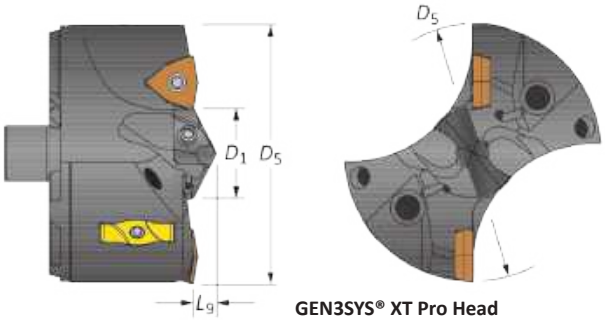

GEN3SYS® XT Pro Head

Heads

Head					T-A Head				GEN3SYS XT Pro Head			IC Insert Size	
D_5 fractional	D_5 inch	D_5 metric	D_1	L_9	Part No.	Pilot Series	T-A Pro Insert	T-A (-TC) Insert	Part No.	Pilot Series	Pilot Insert	inch	metric
3-3/4	3.750	95.25	1-3/8	29/64	**V9502S-0324**	2	TA#2-34.93	1C12H-0112-TC	**V9532S-0324**	32	XT#32-34.93	9/16	14.29
-	3.780	96.00	1-3/8	29/64	**V9502S-96**	2	TA#2-34.93	1C12H-0112-TC	**V9532S-96**	32	XT#32-34.93	9/16	14.29
3-13/16	3.813	96.84	1-3/8	29/64	**V9502S-0326**	2	TA#2-34.93	1C12H-0112-TC	**V9532S-0326**	32	XT#32-34.93	9/16	14.29
-	3.858	98.00	1-3/8	29/64	**V9502S-98**	2	TA#2-34.93	1C12H-0112-TC	**V9532S-98**	32	XT#32-34.93	9/16	14.29
3-7/8	3.875	98.43	1-3/8	29/64	**V9502S-0328**	2	TA#2-34.93	1C12H-0112-TC	**V9532S-0328**	32	XT#32-34.93	9/16	14.29
-	3.937	100.00	1-3/8	29/64	**V9502S-100**	2	TA#2-34.93	1C12H-0112-TC	**V9532S-100**	32	XT#32-34.93	9/16	14.29
3-15/16	3.936	100.01	1-3/8	29/64	**V9502S-0330**	2	TA#2-34.93	1C12H-0112-TC	**V9532S-0330**	32	XT#32-34.93	9/16	14.29
4	4.000	101.60	1-3/8	29/64	**V9502S-0400**	2	TA#2-34.93	1C12H-0112-TC	**V9532S-0400**	32	XT#32-34.93	9/16	14.29

#Denotes ISO material/geometry (P= steel, K= cast iron, N= nonferrous).

IC Inserts

Coating	Size inch	Size metric	Grade	Geometry	Part No.	Insert Screw	Insert Driver	Admissible Tightening Torque*
AM300®	9/16	14.29	C5 (P35)	Standard	**OP-090608-PW**	75014-IP20-1	8IP-20	121.0 in-lbs (1370 N-cm)
AM300®	9/16	14.29	C1 (K35)	Standard	**OP-090608-1PW**	75014-IP20-1	8IP-20	121.0 in-lbs (1370 N-cm)
AM300®	9/16	14.29	C2 (K25)	Standard	**OP-090608-2PW**	75014-IP20-1	8IP-20	121.0 in-lbs (1370 N-cm)
AM300®	9/16	14.29	C5 (P35)	High Rake	**OP-090608-PWHR**	75014-IP20-1	8IP-20	121.0 in-lbs (1370 N-cm)

*Tightening torques are calculated with a friction coefficient of μ = 0.14 and develop 90% of ultimate yield strength.

Wear Pads

Part No.	Wear Pad Screw	Wear Pad Driver	Admissible Tightening Torque*
WP7095	7358-IP10-1	8IP-10	27.0 in-lbs (300 N-cm)

*Tightening torques are calculated with a friction coefficient of μ = 0.14 and develop 90% of ultimate yield strength.
NOTE: Wear pads included with head.

Pilot Accessories

Pilot Style	Series	Insert Screws	Insert Driver	Admissible Tightening Torque*
T-A	2	7495-IP15-1	8IP-15	61.0 in-lbs (690 N-cm)
GEN3SYS	32	7495-IP15-1	8IP-15	61.0 in-lbs (690 N-cm)

*Tightening torques are calculated with a friction coefficient of μ = 0.14 and develop 90% of ultimate yield strength.

A50: 28 - 29
Key on A50: 1

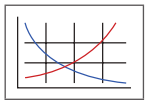

A50: 2 - 5

Section A20

Section A25 & A30

Nonstocked diameters are also available. Follow the examples shown below.

Inch	38 series, T-A (1 series), 1.6790"	Part No. = **V3801D-1.6790**
Metric	38 series, T-A (1 series), 42.15 mm	Part No. = **V3801D-42.15**

Wear pads sold in multiples of 2. | Wear pad screws sold in multiples of 4.
IC inserts sold in multiples of 2. | Insert screws sold in multiples of 10.

APX Drill Holders

95 Series | Diameter Range: 3.740" - 4.000" (95.00 mm - 101.60 mm)

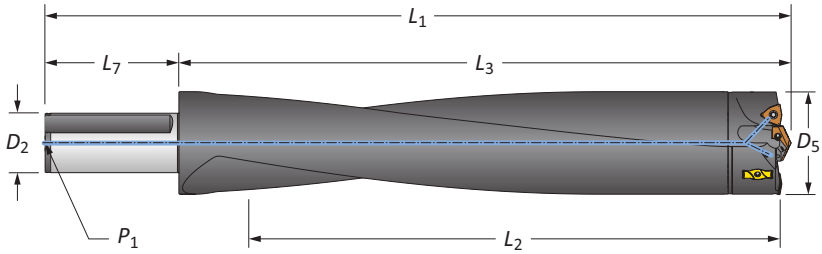

Straight Shank

	Length	D_5	Body L_2	Body L_3	Body L_1	Shank L_7	Shank D_2	Shank P_1	Part No.
i	3xD	3.740 - 4.000	11-7/8	14-9/32	18-25/32	4-1/2	2	1/4 NPT	**W9503H-200F**
i	5xD	3.740 - 4.000	20	22-19/64	26-51/64	4-1/2	2	1/4 NPT	**W9505H-200F**
i	8xD	3.740 - 4.000	27-1/2	29-51/64	34-19/64	4-1/2	2	1/4 NPT	⚠ **W9508H-200F**
i	10xD	3.740 - 4.000	36-5/64	37-57/64	42-25/64	4-1/2	2	1/4 NPT	⚠ **W9510H-200F**
m	3xD	95.00 - 101.60	302.01	362.79	442.80	80.00	50.00	1/4 BSPT	**W9503H-50FM**
m	5xD	95.00 - 101.60	508.00	566.19	646.20	80.00	50.00	1/4 BSPT	**W9505H-50FM**
m	8xD	95.00 - 101.60	699.00	756.69	836.70	80.00	50.00	1/4 BSPT	⚠ **W9508H-50FM**
m	10xD	95.00 - 101.60	972.07	962.28	1042.28	80.00	50.00	1/4 BSPT	⚠ **W9510H-50FM**

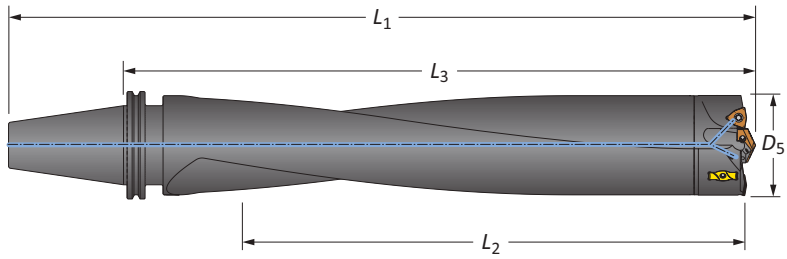

CV50 Shank

	Length	D_5 inch	D_5 mm	Body L_2	Body L_3	Body L_1	Shank	Part No.
i	3xD	3.740 - 4.000	95.00 - 101.60	11-7/8	15-43/64	19-43/64	CV50	**W9503H-CV50**
i	5xD	3.740 - 4.000	95.00 - 101.60	20	23-43/64	27-43/64	CV50	**W9505H-CV50**
i	8xD	3.740 - 4.000	95.00 - 101.60	26-5/8	30-9/32	34-9/32	CV50	⚠ **W9508H-CV50**
i	10xD	3.740 - 4.000	95.00 - 101.60	36-5/64	39-9/64	43-1/4	CV50	⚠ **W9510H-CV50**

Connection Accessories

Mounting Screw	Mounting Screw Bit	Admissible Tightening Torque*
78027-IP30-1	8IP-30B	250 in-lb (2825 N-cm)

*Tightening torques are calculated with a friction coefficient of μ = 0.14 and develop 90% of ultimate yield strength.

⚠ **WARNING** Refer to Speed and Feed charts for recommended adjustments to speeds and feeds. Refer to page A50: 30 for deep hole drilling guidelines in this section of the catalog. Visit **www.alliedmachine.com/DeepHoleGuidelines** for the most up-to-date information and procedures. Factory technical assistance is available for your specific applications through our Application Engineering Team.
ext: **7611** | *email:* **appeng@alliedmachine.com**

i = Imperial (in)
m = Metric (mm)
Mounting screws sold in multiples of 4.

Recommended Drilling Data | Imperial (inch)

ISO	Material	Hardness (BHN)	Outboard Insert Series Speed (SFM)	Outboard Insert Series Pilot Style	Feed Rate (IPR) by Diameter: 5/16" IC, 33, 1.299" - 1.495"	3/8" IC, 38 - 44, 1.496" - 1.885"	1/2" IC, 44 - 51, 1.886" - 2.210"	9/16" IC, 51 - 57 - 63, 2.211" - 2.755"	3/8" IC, 70, 2.756" - 2.992"	1/2" IC, 76 - 83, 2.992" - 3.503"	9/16" IC, 89 - 95, 3.504" - 4.000"
P	**Free-Machining Steel** 1118, 1215, 12L14, etc.	100 - 250	450 - 750	T-A/GEN3SYS	.006 - .011	.007 - .012	.009 - .012	.009 - .012	.006 - .010	.007 - .011	.007 - .012
P	**Low-Carbon Steel** 1010, 1020, 1025, 1522, 1144, etc.	85 - 275	450 - 750	T-A/GEN3SYS	.006 - .011	.007 - .012	.009 - .012	.009 - .012	.006 - .010	.007 - .011	.007 - .012
P	**Medium-Carbon Steel** 1030, 1040, 1050, 1527, 1140, 1151, etc.	125 - 325	450 - 750	T-A/GEN3SYS	.006 - .011	.007 - .012	.009 - .012	.009 - .012	.006 - .010	.007 - .011	.007 - .012
P	**Alloy Steel** 4140, 5140, 8640, etc.	125 - 375	400 - 700	T-A/GEN3SYS	.005 - .007	.005 - .009	.007 - .010	.007 - .011	.005 - .009	.006 - .010	.006 - .010
P	**High-Strength Alloy** 4340, 4330V, 300M, etc.	225 - 400	300 - 500	T-A/GEN3SYS	.005 - .006	.005 - .007	.005 - .008	.006 - .009	.005 - .007	.005 - .008	.006 - .008
P	**Structural Steel** A36, A285, A516, etc.	100 - 350	450 - 750	T-A/GEN3SYS	.006 - .008	.007 - .009	.008 - .010	.009 - .011	.005 - .009	.006 - .010	.007 - .010
P	**Tool Steel** H-13, H-21, A-4, 0-2, S-3, etc.	150 - 250	300 - 500	T-A/GEN3SYS	.005 - .006	.005 - .007	.007 - .009	.008 - .010	.005 - .007	.006 - .009	.007 - .010
S	**High-Temp Alloy** Hastelloy B, Inconel 600, etc.	140 - 310	200 - 400	T-A	.004 - .005	.004 - .007	.006 - .009	.007 - .009	.004 - .006	.005 - .007	.005 - .007
S	**Titanium Alloy**	140 - 310	300 - 500	T-A	.005 - .007	.006 - .008	.007 - .009	.008 - .010	.004 - .006	.005 - .007	.005 - .007
S	**Aerospace Alloy** S82	185 - 350	400 - 600	T-A/GEN3SYS	.004 - .006	.005 - .007	.006 - .008	.006 - .008	.004 - .006	.005 - .007	.005 - .007
M	**Stainless Steel 400 Series** 416, 420, etc.	185 - 350	300 - 500	T-A/GEN3SYS	.006 - .008	.007 - .009	.008 - .010	.009 - .011	.005 - .007	.007 - .009	.007 - .010
M	**Stainless Steel 300 Series** 304, 316, 17-4PH, etc.	135 - 275	300 - 500	T-A/GEN3SYS	.005 - .007	.006 - .008	.007 - .009	.008 - .010	.004 - .008	.006 - .010	.006 - .010
M	**Super Duplex Stainless Steel**	135 - 275	250 - 450	T-A/GEN3SYS	.004 - .006	.005 - .007	.007 - .009	.007 - .009	.004 - .007	.006 - .009	.007 - .010
H	**Wear Plate** Hardox®, AR400, T-1, etc.	400 - 600	300 - 500	T-A	.003 - .005	.004 - .006	.006 - .008	.007 - .009	.003 -.005	.004 - .006	.004 - .006
H	**Hardened Steel**	300 - 500	300 - 500	T-A	.004 - .005	.005 - .006	.006 - .008	.006 - .008	.003 - .005	.004 - .006	.004 - .006
K	**Nodular, Grey, Ductile Cast Iron**	120 - 320	500 - 800	T-A/GEN3SYS	.005 - .009	.006 - .010	.008 - .012	.010 - .012	.008 - .010	.009 - .011	.010 - .012
N	**Cast Aluminum**	30 - 180	600 - 800	T-A/GEN3SYS	.009 - .012	.010 - .014	.012 - .016	.012 - .016	.006 - .009	.008 - .011	.008 - .012
N	**Wrought Aluminum**	30 - 180	600 - 800	T-A/GEN3SYS	.007 - .011	.008 - .012	.010 - .014	.010 - .014	.006 - .009	.008 - .011	.008 - .012
N	**Aluminum Bronze**	100 - 250	400 - 700	T-A/GEN3SYS	.005 - .007	.005 - .008	.007 - .010	.009 - .011	.006 - .009	.007 - .010	.008 - .012
N	**Brass**	30 - 100	800	T-A/GEN3SYS	.006 - .008	.007 - .009	.008 - .010	.009 - .012	.006 - .008	.007 - .009	.008 - .012
N	**Copper**	60	700	T-A/GEN3SYS	.002 - .005	.003 - .006	.006 - .008	.008 - .010	.006 - .008	.006 - .008	.006 - .008

Coolant Recommendations

Series	Pressure (PSI)	Flow Rate (GPM)
33	350	10
38	300	10
44	275	12
51	250	18
57	225	20
63	200	22
70	150	25
76	100	28
83	100	30
89	100	33
95	100	33

Calculations

Value	Formula
SFM	RPM • 0.262 • Diameter
RPM	(SFM • 3.82) / Diameter
IPM	RPM • IPR

IMPORTANT: The speeds and feeds listed above are a general starting point for all applications. Refer to the Coolant Recommendation charts for coolant requirements to run at the recommended speeds and feeds. Factory technical assistance is also available through our Application Engineering Team. *ext:* **7611** | *email:* **appeng@alliedmachine.com**

IMPORTANT: The coolant pressure and flow rate recommendations above represent a good approximation to obtain optimum tool life and chip evacuation at Allied Machine recommended speeds and feeds. If lower coolant capabilities exist in a drilling application, the APX Drilling System will still function at reduced penetration rates. Contact our Application Engineering department for a more specific recommendation of coolant requirements and/or speeds and feeds.

⚠ WARNING **Tool failure can cause serious injury. To prevent:** For APX holders 8xD or longer, do not rotate tool more than 50 RPM unless it is engaged with workpiece or fixture. Refer to page A50: 30 for Deep Hole Drilling Guidelines in this section of the catalog. Visit **www.alliedmachine.com/DeepHoleGuidelines** for the most up-to-date information and procedures. Factory technical assistance is also available for your specific applications.

Recommended Drilling Data | Metric (mm)

ISO	Material	Hardness (BHN)	Outboard Insert Series Speed (m/min)	Pilot Style	Feed Rate (mm/rev) by Diameter: 5/16" IC, 33, 33.00 mm - 37.99 mm	3/8" IC, 38 - 44, 38.00 mm - 47.88 mm	1/2" IC, 44 - 51, 47.89 mm - 56.13 mm	9/16" IC, 51 - 57 - 63, 56.14 mm - 69.99 mm	3/8" IC, 70, 70.00 mm - 75.99 mm	1/2" IC, 76 - 83, 76.00 mm - 88.99 mm	9/16" IC, 89 - 95, 89.00 mm - 101.60 mm
P	**Free-Machining Steel** 1118, 1215, 12L14, etc.	100 - 250	137 - 229	T-A/GEN3SYS	0.15 - 0.28	0.18 - 0.30	0.23 - 0.30	0.23 - 0.30	0.15 - 0.25	0.18 - 0.28	0.18 - 0.30
P	**Low-Carbon Steel** 1010, 1020, 1025, 1522, 1144, etc.	85 - 275	137 - 229	T-A/GEN3SYS	0.15 - 0.28	0.18 - 0.30	0.23 - 0.30	0.23 - 0.30	0.15 - 0.25	0.18 - 0.28	0.18 - 0.30
P	**Medium-Carbon Steel** 1030, 1040, 1050, 1527, 1140, 1151, etc.	125 - 325	137 - 229	T-A/GEN3SYS	0.15 - 0.28	0.18 - 0.30	0.23 - 0.30	0.23 - 0.30	0.15 - 0.25	0.18 - 0.28	0.18 - 0.30
P	**Alloy Steel** 4140, 5140, 8640, etc.	125 - 375	122 - 213	T-A/GEN3SYS	0.13 - 0.18	0.13 - 0.23	0.18 - 0.25	0.18 - 0.28	0.13 - 0.23	0.15 - 0.25	0.15 - 0.25
P	**High-Strength Alloy** 4340, 4330V, 300M, etc.	225 - 400	91 - 152	T-A/GEN3SYS	0.13 - 0.15	0.13 - 0.18	0.13 - 0.20	0.15 - 0.23	0.13 - 0.18	0.13 - 0.20	0.15 - 0.20
P	**Structural Steel** A36, A285, A516, etc.	100 - 350	137 - 229	T-A/GEN3SYS	0.15 - 0.20	0.18 - 0.23	0.20 - 0.25	0.23 - 0.28	0.13 - 0.23	0.15 - 0.25	0.15 - 0.25
P	**Tool Steel** H-13, H-21, A-4, 0-2, S-3, etc.	150 - 250	91 - 152	T-A/GEN3SYS	0.13 - 0.15	0.13 - 0.18	0.18 - 0.23	0.20 - 0.25	0.13 - 0.18	0.15 - 0.23	0.18 - 0.25
S	**High-Temp Alloy** Hastelloy B, Inconel 600, etc.	140 - 310	61 - 122	T-A	0.10 - 0.13	0.10 - 0.18	0.15 - 0.23	0.18 - 0.23	0.10 - 0.15	0.13 - 0.18	0.13 - 0.18
S	**Titanium Alloy**	140 - 310	91 - 152	T-A	0.13 - 0.18	0.15 - 0.20	0.18 - 0.23	0.20 - 0.25	0.10 - 0.15	0.13 - 0.18	0.13 - 0.18
S	**Aerospace Alloy** S82	185 - 350	122 - 183	T-A/GEN3SYS	0.10 - 0.15	0.13 - 0.18	0.15 - 0.20	0.15 - 0.20	0.10 - 0.15	0.13 - 0.18	0.13 - 0.18
M	**Stainless Steel 400 Series** 416, 420, etc.	185 - 350	91 - 152	T-A/GEN3SYS	0.15 - 0.20	0.18 - 0.23	0.20 - 0.25	0.23 - 0.28	0.13 - 0.18	0.18 - 0.23	0.18 - 0.25
M	**Stainless Steel 300 Series** 304, 316, 17-4PH, etc.	135 - 275	91 - 152	T-A/GEN3SYS	0.13 - 0.18	0.15 - 0.20	0.18 - 0.23	0.20 - 0.25	0.10 - 0.20	0.15 - 0.25	0.15 - 0.25
M	**Super Duplex Stainless Steel**	135 - 275	76 - 137	T-A/GEN3SYS	0.10 - 0.15	0.13 - 0.18	0.18 - 0.23	0.18 - 0.23	0.10 - 0.18	0.15 - 0.23	0.18 - 0.25
H	**Wear Plate** Hardox®, AR400, T-1, etc.	400 - 600	91 - 152	T-A	0.07 - 0.13	0.10 - 0.15	0.15 - 0.20	0.18 - 0.23	0.08 - 0.13	0.10 - 0.15	0.10 - 0.15
H	**Hardened Steel**	300 - 500	91 - 152	T-A	0.10 - 0.13	0.13 - 0.15	0.15 - 0.20	0.15 - 0.20	0.08 - 0.13	0.10 - 0.20	0.10 - 0.20
K	**Nodular, Grey, Ductile Cast Iron**	120 - 320	152 - 244	T-A/GEN3SYS	0.13 - 0.23	0.15 - 0.25	0.20 - 0.30	0.25 - 0.30	0.20 - 0.25	0.23 - 0.28	0.25 - 0.30
N	**Cast Aluminum**	30 - 180	183 - 244	T-A/GEN3SYS	0.23 - 0.30	0.25 - 0.36	0.30 - 0.40	0.30 - 0.40	0.15 - 0.23	0.20 - 0.28	0.20 - 0.30
N	**Wrought Aluminum**	30 - 180	183 - 244	T-A/GEN3SYS	0.18 - 0.28	0.20 - 0.30	0.25 - 0.36	0.25 - 0.36	0.15 - 0.23	0.20 - 0.28	0.20 - 0.30
N	**Aluminum Bronze**	100 - 250	123 - 213	T-A/GEN3SYS	0.13 - 0.18	0.13 - 0.20	0.18 - 0.25	0.23 - 0.28	0.15 - 0.23	0.18 - 0.25	0.20 - 0.30
N	**Brass**	30 - 100	244	T-A/GEN3SYS	0.15 - 0.20	0.18 - 0.23	0.20 - 0.25	0.23 - 0.30	0.15 - 0.20	0.18 - 0.23	0.20 - 0.25
N	**Copper**	60	213	T-A/GEN3SYS	0.05 - 0.13	0.08 - 0.15	0.15 - 0.20	0.20 - 0.25	0.08 - 0.15	0.15 - 0.20	0.15 - 0.20

Coolant Recommendations

Series	Pressure (BAR)	Flow Rate (LPM)
33	24	38
38	21	38
44	19	45
51	17	68
57	16	76
63	14	83
70	10	95
76	7	106
83	7	114
89	7	125
95	7	125

Calculations

Value	Formula
m/min	RPM • 0.003 • Diameter
RPM	(m/min • 318.47) / Diameter
mm/min	RPM • mm/rev

IMPORTANT: The speeds and feeds listed above are a general starting point for all applications. Refer to the Coolant Recommendation charts for coolant requirements to run at the recommended speeds and feeds. Factory technical assistance is also available through our Application Engineering Team. *ext:* **7611** | *email:* **appeng@alliedmachine.com**

IMPORTANT: The coolant pressure and flow rate recommendations above represent a good approximation to obtain optimum tool life and chip evacuation at Allied Machine recommended speeds and feeds. If lower coolant capabilities exist in a drilling application, the APX Drilling System will still function at reduced penetration rates. Contact our Application Engineering department for a more specific recommendation of coolant requirements and/or speeds and feeds.

⚠ WARNING **Tool failure can cause serious injury. To prevent:** For APX holders 8xD or longer, do not rotate tool more than 50 RPM unless it is engaged with workpiece or fixture. Refer to page A50: 30 for Deep Hole Drilling Guidelines in this section of the catalog. Visit **www.alliedmachine.com/DeepHoleGuidelines** for the most up-to-date information and procedures. Factory technical assistance is also available for your specific applications.

Deep Hole Drilling Guidelines

1. Approach
50 RPM max
12 IPM (300 mm/min)

Feed the longer drill within 1/16" (1.5 mm) short of the workpiece at a **maximum of 50 RPM** and 12 IPM (300 mm/min) feed rate.

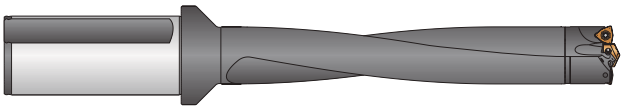

Coolant OFF

2. Feed-in
Speed at 75% of recommended start
Feed at 50% of recommended start

Drill 3/4" deep at 75% recommended speed and 50% recommended feed to establish the hole.

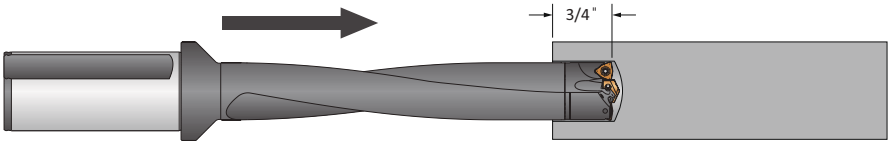

Coolant ON

3. Deep Hole Drilling - Blind
100 % RPM
100% IPR (mm/rev)

Drill to full depth at recommended speed and feed for longer drills (according to Allied Machine speed and feed charts).
***No peck cycle recommended.**

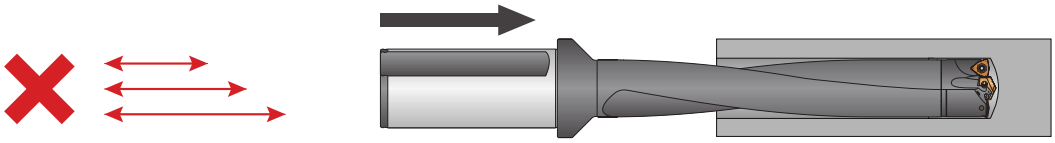

Coolant ON

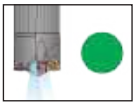

4. Deep Hole Drilling - at Breakout
50% RPM
100% IPR (mm/rev)

***For through holes only:**
Reduce speed by 50% prior to breakout.
Do not break out more than 1/8" (3 mm) past the full diameter of the drill.

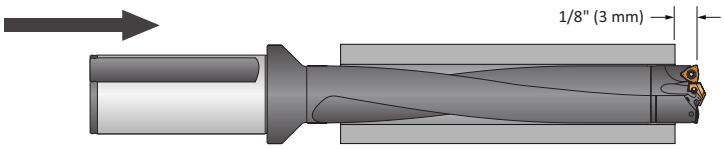

Coolant ON

5. Drill Retract
50 RPM max

Reduce speed to a **maximum of 50 RPM** before retracting from the hole.

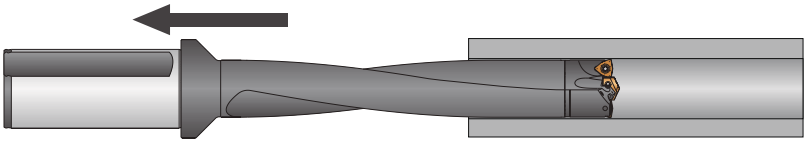

Coolant OFF

WARNING **Tool failure can cause serious injury. To prevent:** NEVER rotate these tool holders more than 50 RPM without proper engagement with a workpiece or fixture. Failure to do so could result in tool failure and/or personal injury. Visit **www.alliedmachine.com/DeepHoleGuidelines** for the most up-to-date information and procedures. Factory technical assistance is also available for your specific applications.
ext: **7611** | *email:* **appeng@alliedmachine.com**

Notes

Guaranteed Test / Demo Application Form

Distributor PO #	

The following must be filled out completely before your test will be considered.

IMPORTANT: For processing, send purchase order to your Allied Field Sales Engineer (FSE). Please clearly mark the paperwork as "Test Order."

Distributor Information

Company Name: _____

Contact: _____

Account Number: _____

Phone: _____

Email: _____

End User Information

Company Name: _____

Contact: _____

Industry: _____

Phone: _____

Email: _____

Current Process

List all tooling, coatings, substrates, speeds and feeds, tool life, and any problems you are experiencing.

_____

_____

Test Objective

List what would make this a successful test (i.e. penetration rate, finish, tool life, hole size, etc.).

_____

_____

Application Information

Hole Diameter: _____ in/mm

Tolerance: _____

Material: _____ (4150, A36, cast iron, etc.)

Preexisting Diameter: _____ in/mm

Depth of Cut: _____ in/mm

Hardness: _____ (BHN, Rc)

Required Finish: _____ RMS

State: _____ (Casting, hot rolled, forging)

Machine Information

Machine Type: _____ (Lathe, screw machine, machine center, etc.)

Builder: _____ (Haas, Mori Seiki, etc.)

Model #: _____

Shank Required: _____ (CAT50, Morse taper, etc.)

Power: _____ HP/KW

Thrust: _____ lbs/N

Rigidity:
- ☐ Excellent
- ☐ Good
- ☐ Poor

Orientation:
- ☐ Vertical
- ☐ Horizontal

Tool Rotating:
- ☐ Yes
- ☐ No

Coolant Information

Coolant Delivery: _____ (Through tool, flood)

Coolant Pressure: _____ PSI / bar

Coolant Type: _____ (Air mist, oil, synthetic, water soluble, etc.)

Coolant Volume: _____ GPM / LPM

Requested Tooling

QTY	Item Number

QTY	Item Number

ALLIED MACHINE & ENGINEERING

Allied Machine & Engineering
120 Deeds Drive
Dover, OH 44622

Telephone: (330) 343-4283
Toll Free USA & Canada: (800) 321-5537
Email: info@alliedmachine.com

ALLIED MACHINE & ENGINEERING

Warranty Information

Allied Machine & Engineering ("Allied Machine") warrants to original equipment manufacturers, distributors, industrial and commercial users of its products for one year from the original date of sale that each new product manufactured or supplied by Allied Machine shall be free from defects in material and workmanship.

Allied Machine's sole and exclusive obligation under this warranty is limited to, at its option, without additional charge, replacing or repairing this product or issuing a credit. For this warranty to be applied, the product must be returned freight prepaid to the plant designated by an Allied Machine representative and which, upon inspection, is determined by Allied Machine to be defective in material and workmanship.

Complete information as to operating conditions, machine, setup, and the application of cutting fluid should accompany any product returned for inspection. This warranty shall not apply to any Allied Machine products which have been subjected to misuse, abuse, improper operating conditions, improper machine setup or improper application of cutting fluid or which have been repaired or altered if such repair or alteration, in the judgement of Allied Machine, would adversely affect the performance of the product.

THIS WARRANTY IS IN LIEU OF ALL OTHER WARRANTIES, EXPRESS OR IMPLIED, INCLUDING ANY IMPLIED WARRANTY OF MERCHANTABILITY OR FITNESS FOR A PARTICULAR PURPOSE. Allied Machine shall have no liability or responsibility for any claim, whether in contract, tort or otherwise, for any loss or damage arising out of, connected with, or resulting from the manufacture, sale, delivery or use of any product sold hereunder, in excess of the cost of replacement or repair as provided herein.

Allied Machine shall not be liable in contract or in tort (including, without limitation, negligence, strict liability or otherwise) for economic losses of any kind or for any special, incidental, indirect, consequential, punitive or exemplary damages arising in any way out of the performance of, or failure to perform this agreement.

ALL PRICES, DELIVERIES, DESIGNS, AND MATERIALS ARE SUBJECT TO CHANGE WITHOUT NOTICE.

Allied Machine & Engineering is registered to ISO 9001:2015 by DQS.

Wohlhaupter GmbH is registered to ISO 9001:2015 by QUACERT.

Allied Machine & Engineering Co. Europe Ltd. is registered to ISO 9001:2015 by bsi.

United States

Allied Machine & Engineering
120 Deeds Drive
Dover OH 44622
United States

Phone:
+1.330.343.4283

Toll Free USA and Canada:
800.321.5537

Toll Free USA and Canada:
800.223.5140

Allied Machine & Engineering
485 W Third Street
Dover OH 44622
United States

Phone:
+1.330.343.4283

Toll Free USA and Canada:
800.321.5537

Europe

Allied Machine & Engineering Co. (Europe) Ltd
93 Vantage Point
Pensnett Estate
Kingswinford
West Midlands
DY6 7FR England

Phone:
+44 (0) 1384 400 900

Wohlhaupter® GmbH
Maybachstrasse 4
Postfach 1264
72636 Frickenhausen
Germany

Phone:
+49 (0) 7022 408-0

Asia

Wohlhaupter® India Pvt. Ltd.
B-23, 3rd Floor
B Block Community Centre
Janakpuri, New Delhi - 110058
India

Phone:
+91 (0) 11.41827044

Your local Allied Machine representative:

www.alliedmachine.com

Allied Machine & Engineering is registered to **ISO 9001:2015** by DQS.
Wohlhaupter GmbH is registered to **ISO 9001:2015** by QUACERT.
Allied Machine & Engineering Co. (Europe) Ltd is registered to **ISO 9001:2015** by bsi.

ALLIED MACHINE & ENGINEERING

Copyright © 2025 Allied Machine and Engineering Corp. – All rights reserved.
All trademarks designated with the ® symbol are registered in the United States and other countries.
Available Online Only: A50-APX
Publish Date: May 2025