ALLIED MACHINE & ENGINEERING

Holemaking Solutions for Today's Manufacturing

Drilling

Boring

Burnishing

Threading

ALVAN® Reamers

▶ *REAMING*

Finishing Solutions by S.C.A.M.I.

Specials

S.C.A.M.I.®

SECTION C

Reaming

ALVAN® Reamers

Replaceable Head Style | Monobloc Style | Cutting Ring Style

S.C.A.M.I.®

Every Option for Every Application

Allied Machine & Engineering is pleased to offer ALVAN® Reamers through an exclusive supply agreement with S.C.A.M.I. s.n.c., an Italian manufacturer that provides high-quality cutting tools.

In addition to producing close tolerances and dimensional accuracy of machined holes, these high performance reaming products provide lower costs per hole through high penetration rates, making them the ideal choice for finishing holes in a production environment. It can also prove to be an alternative to finish boring by providing more consistent hole sizes and lower cycle times.

Excellent hole tolerances.	Improves hole quality and surface finish.	Expandable design accommodates for wear.

Applicable Industries

Aerospace | Agriculture | Automotive | Firearms | General Machining | Oil & Gas | Renewable Energy

Your safety and the safety of others is very important. This catalog contains important safety messages. Always read and follow all safety precautions.

This triangle is a safety hazard symbol. It alerts you to potential safety hazards that can cause tool failure and serious injury.

When you see this symbol in the catalog, look for a related safety message that may be near this triangle or referred to in the nearby text.

There are safety signal words also used in the catalog. Safety messages follow these words.

WARNING

WARNING (shown above) means that failure to follow the precautions in this message could result in tool failure and serious injury.

NOTICE means that failure to follow the precautions in this message could result in damage to the tool or machine but not result in personal injury.

NOTE and **IMPORTANT** are also used. These are important that you read and follow but are not safety-related.

Visit www.alliedmachine.com for the most up-to-date information and procedures.

Reference Icons
The following icons will appear throughout the catalog to help you navigate between products.

Setup / Assembly Information
Detailed instructions and information regarding the corresponding part(s)

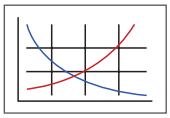

Recommended Cutting Data
Speed and feed recommendations for optimum and safe reaming

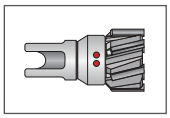

Replaceable Reamer Heads
Refers to the reamer head options that connect to the reamer mandrels

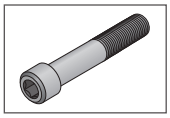

Replaceable Reamer Screws
Refers to the reamer head screw options that connect the head to the reamer mandrels

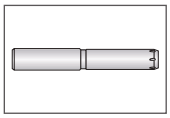

Replaceable Reamer Mandrels
Refers to the reamer mandrel options that connect with the head and screw

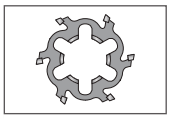

Cutting Rings
Refers to the available cutting ring options

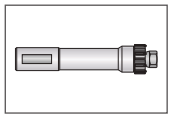

Cutting Ring Mandrels
Refers to the reamer mandrel options that connect with the cutting ring

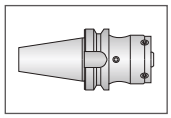

Modular Connection Shanks
Refers to Cerit modular shanks that can connect with reamers

Coolant-Through Option
Indicates that the product is coolant through

S.C.A.M.I.®

Allied Machine & Engineering offers ALVAN® Reamers through an exclusive supply agreement with S.C.A.M.I. s.n.c.

S.C.A.M.I. is an Italian manufacturer that has been producing high-quality cutting tools for over 40 years. In addition to producing close tolerances and dimensional accuracy of machined holes, this high performance reaming product provides a lower cost per hole through its high penetration rates. This makes the ALVAN Reamer product line an ideal choice for finishing holes in a production environment. It can also prove to be an alternative to finish boring by providing more consistent hole sizes and lower cycle times.

For additional information about all Allied Machine products, visit **www.alliedmachine.com.** For technical assistance, contact our Application Engineering department.
ext: **7611** | *email:* **appeng@alliedmachine.com**

ALVAN® Reamers Contents

Introduction Information

Case Study Example 2
Reconditioning Service 3
Reaming Overview and Selection . . . . . 4 - 7
Lead-ins, Coatings, Materials, and Dimples . . . . . 8 - 9

Replaceable Head Reamers

Product Overview 10
Product Nomenclature 11
7000 Series . . . . . 12 - 19
9000 Series . . . . . 20 - 23
5000 Series . . . . . 24 - 26

Monobloc Reamers . . . . . 28 - 35

Ring Style Reamers . . . . . 36 - 59

Shanks and Adapters . . . . . 60 - 67

Recommended Cutting Data

Imperial (in)
- **Replaceable Head Style**
  - 7000 Series . . . . . 68 - 69
  - 9000 Series . . . . . 70 - 71
  - 5000 Series . . . . . 72 - 73
- **Monobloc Style** . . . . . 74 - 75
- **Cutting Ring Style** . . . . . 76 - 77

Metric (mm)
- **Replaceable Head Style**
  - 7000 Series . . . . . 78 - 79
  - 9000 Series . . . . . 80 - 81
  - 5000 Series . . . . . 82 - 83
- **Monobloc Style** . . . . . 84 - 85
- **Cutting Ring Style** . . . . . 86 - 87

Technical Information

Setup
7000 Series 88
9000 Series 89
5000 Series 90
Monobloc Style 91
Cutting Ring Style 92
Diameter Measurement 93
TIR Measurement and Adjustment . . . . . 94 - 95
Troubleshooting Guide 96

Case Study Example

CASE STUDY

Project Profile:	Grey Cast Iron Hydraulic Transmission Component
Tooling Solution:	ALVAN® Reamer - Monobloc Style

The Problem:

Previously, the customer was using a competitor boring tool running at the following parameters:

- 3802 RPM
- 500 SFM
- 0.003 IPR
- 11.41 IPM

With two passes, the tool made a 0.5023" diameter hole to a 1.20" depth.

- Cycle time = 12.6 seconds
- Tool life = 75 parts

Seeking to streamline the production process, the customer needed to increase tool life and lower the cost of production.

The Solution:

Allied Machine recommended the ALVAN® monobloc style reamer.

- **Reamer** = 92440 series carbide, uncoated, V lead

The tool ran at the following parameters:

- 2200 RPM
- 289 SFM
- 0.019 IPR
- 41.80 IPM

The tool achieved the desired diameter and depth, and the results achieved the customer's goals.

- Cycle time = 1.7 seconds
- Tool life = 3,176 parts

The Advantages:

The customer was able to lower the cost of production and increase the tool life.

- Reduced cycle time ***from 12.6 seconds to 1.7 seconds***
- Increased tool life ***from 75 parts to an incredible 3,176 parts***
- Total cost savings = **$2,407 (or 52%)**

The **PROOF** is in the **NUMBERS**

Tool Life: Competitor Boring
(number of parts = 75)

Tool Life: ALVAN® Monobloc Style Reamer
(number of parts = 3,176)

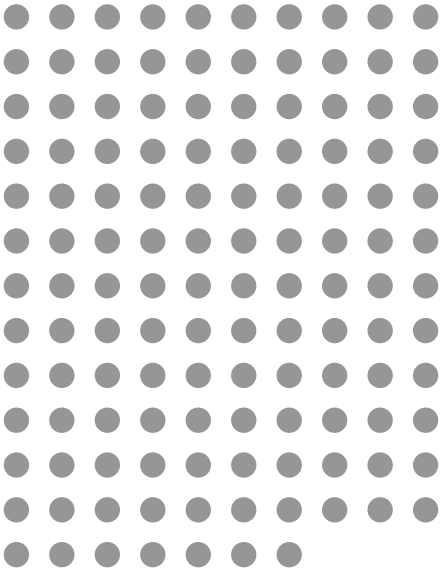

Overall ***SAVINGS*** of

52%

PREMIUM SOLUTION

Reconditioning Service

All ALVAN Reamers can be reconditioned to help reduce your overall tooling costs. This service is provided through Allied Machine & Engineering by utilizing the expertise of S.C.A.M.I. We will process the tools with a 25-35 workday lead time, depending on the style, the date we receive the tools, and the purchase order.

Reamer Style		Lead Time (workdays)	Part No.	Reconditioned Part No.
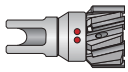	Replaceable Head*	25	I7405-SVG-10000	**R**I7405SVG10000
	Monobloc	35	AL3620I04853	AL3620I04853**RP1**
	Cutting Ring	35	AL2TIAI05820	AL2TIAI05820**RP1**

*Only 7000 series heads are eligible for reconditioning.

Parts to be Reconditioned
(packaged safely)

Purchase Order

Allied Machine & Engineering
Attn: Regrind Department
120 Deeds Drive
Dover, OH 44622
United States

Reaming Overview

REAMER STYLES

Replaceable Head
Pages C: 10 - 26

- Diameter range: 9.600 mm - 80.600 mm.
- Heads are available as fixed or expanding for improved productivity.
- Straight, left-hand, or right-hand helical flutes provide solutions for both through and blind holes.
- Cylindrical or modular shanks improve concentricity.

Monobloc
Pages C: 28 - 35

- Diameter range: 5.800 mm - 32.100 mm.
- Available with central or radial through coolant.
- Can be used for through or blind holes.
- Cylindrical shanks improve concentricity.
- Expandable to accommodate for wear.

Cutting Ring
Pages C: 36 - 59

- Diameter range: 17.600 mm - 200.600 mm.
- The cutting edges are positioned asymmetrically to assure the best roundness of the hole.
- Holes with tight tolerances can be accommodated, and the expansion ensures a perfect holding of the reaming diameter.

General Reaming Notes

- If the depth is over 9xD, use a short length reamer to pilot the hole. Then finish with the longer length ⚠.
- For blind hole applications, always use central coolant. If in doubt, contact Allied's Application Engineering department.
- More stock allowance can be taken in softer materials. Less stock allowance should be taken in harder materials.
- A common practice is to rapid out of the cut on through holes and to breakout only 2 mm past the reaming depth.

IMPORTANT: Always use Molykote® (anti-seize applicant) on the conical seat and the threads on the central screw for assembly.

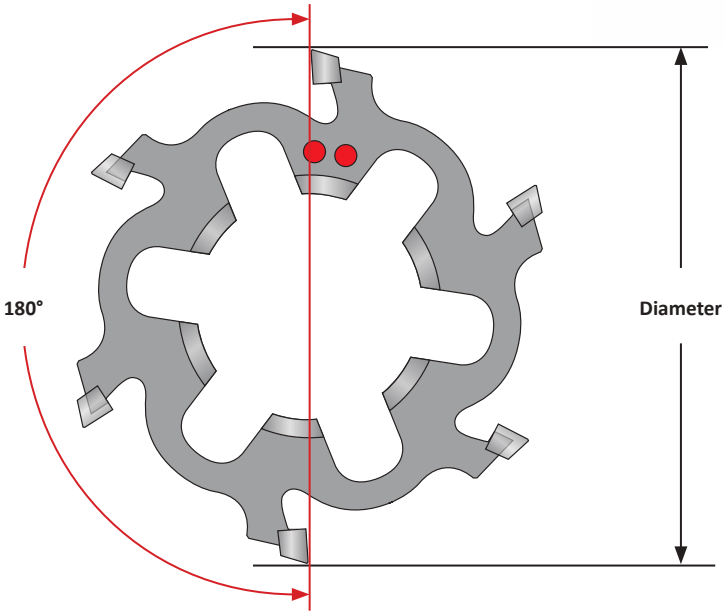

NOTE: The position of the dimples indicates which two cutting teeth are 180° opposed. Diameter measurements should be taken from these two cutting teeth.

⚠ WARNING **Tool failure can cause serious injury. To prevent:**
- When using holders without support bushing, use a shorter reamer to establish the initial hole diameter that is a minimum of 2 diameters deep.
- Do not rotate reamers more than 50 RPM unless it is engaged with the workpiece or fixture.

Factory technical assistance is available for your specific applications through our Application Engineering Team. *ext:* **7611** | *email:* **appeng@alliedmachine.com**

Quick Selection Guide

Breakdown by Diameter

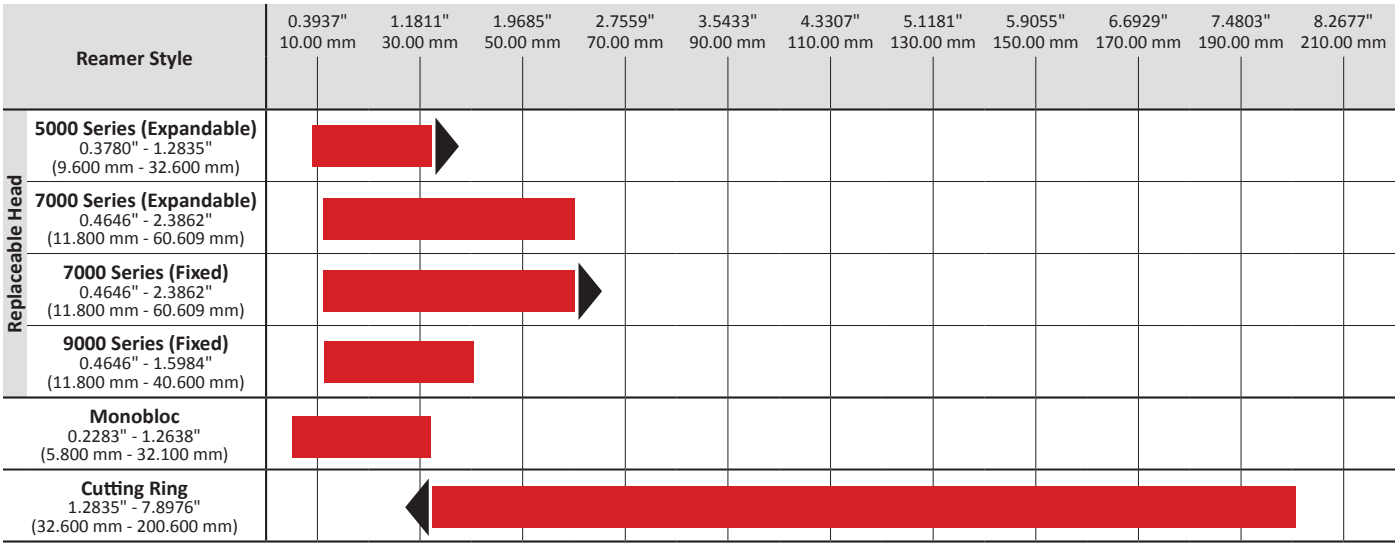

▶ Any product line with a black arrow indicates that nonstandard diameters can be ordered by contacting Application Engineering.

Breakdown by Features

	Reamer Style	Capable Tolerance	Fastest Setup	Replaceable Cutting Head	Expandable to Adjust for Wear	Recondition Available	Cylindrical Shanks	Modular Shanks	Through-Coolant Options
Replaceable Head	5000 Series (expandable)	H6	✓	✓	✓		✓	✓	✓
Replaceable Head	7000 Series (expandable)	H6		✓	✓	✓	✓	✓	✓
Replaceable Head	7000 Series (fixed)	H7	✓	✓		✓	✓	✓	✓
Replaceable Head	9000 Series (fixed)	H7	✓	✓			✓	✓	✓
	Monobloc	H6			✓	✓	✓		✓
	Cutting Ring	H6		✓	✓	✓	✓	✓	✓

For more details on how to select a reamer, see the following pages.

How the Reamer Works

How the Reamer **Works**

- The cut is made in the lead-in zone (3), and the chip is made on the cutting face (1). The chip is removed by coolant.
- The lead-in (3) is defined depending on the application, the workpiece material, and the stock allowance.
- The radial land (2) is important for holding a good alignment, improving the surface roughness, and giving an effect similar to burnishing. The dimension of the radial land depends on the diameter.
- The radial land (2) is manufactured to be tapered on the rear.
- Fixed reamers are manufactured at the exact tapered value. Expandable reamers must be adjusted to the exact diameter. Both are already supplied at the nominal diameter by the manufacturer.
- The undercut of the cutting edge (5) avoids retract marks on the piece when the reamer is retracted from the cut.
- The front of the cutting edge (6) does not cut; if this feature is needed, a frontal lead must be supplied.

When to **Apply** a Reamer

- When the requested tolerance on diameter is IT8 or less.
- When the requested finish is 63 µin (1.6 µmm) Ra or greater.
- When the critical geometry characteristics of the hole are the roundness and straightness .
- When parts are being mass produced.
- When the parts are large and expensive.

Elements of the Cutting Tooth

- (1) Cutting Face
- (2) Radial Land
- (3) Lead-in / Primary Face / Secondary Face
- (4) Rear Face
- (5) Undercut of Cutting Edge
- (6) Front of Cutting Edge

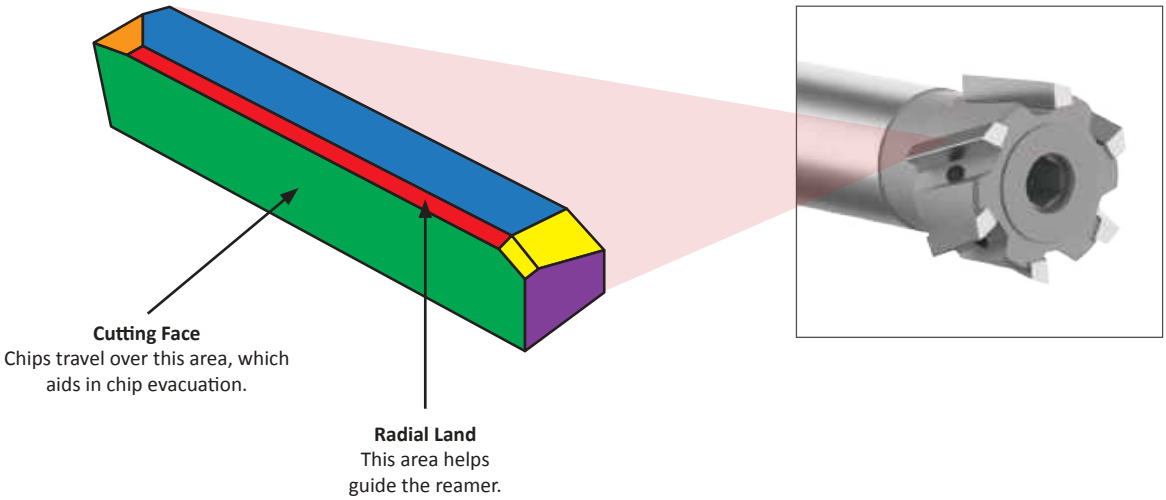

Reamer Recommendation Guide

ISO	Material	Hardness (BHN)	Uninterrupted Cut: Lead, Through Hole, 1 Straight	Uninterrupted Cut: Lead, Through Hole, 2 Left-Hand Helical	Uninterrupted Cut: Lead, Blind Hole, 1 Right-Hand Helical	Uninterrupted Cut: Lead, Blind Hole, 2 Straight	Uninterrupted Cut: Substrate & Coating	Interrupted Cut: Lead, Through Hole, Left-Hand Helical	Interrupted Cut: Lead, Blind Hole, Right-Hand Helical	Interrupted Cut: Substrate & Coating
P	**Free-Machining Steel** 1118, 1215, 12L14, etc.	—	N, K	E	E, K	G, K	Cermet Uncoated	E	E	Carbide TiN
P	**Low-Carbon Steel** 1010, 1020, 1522, 1144, etc.	<250	N, K	E	E, K	G, K	Cermet Uncoated	E	E	Carbide TiN
P	**Medium-Carbon Steel** 1030, 1040, 1050, 1140, 1151, etc.	<300	N, K	E	E, K	G, K	Cermet Uncoated	E	E	Carbide TiAlN
P	**Alloy Steel** 4140, 5140, 8640, etc.	<350	G, K	E	E, K	G, K	Cermet Uncoated	E	E	Carbide TiAlN
P	**High-Strength Alloy** 4340, 4330V, 300M, etc.	240 - 450	G, K	M	M, K	G, K	Carbide Alcrona	M*	M	Carbide Alcrona
P	**Structural Steel**	—	G, K	E	E	G, K	Cermet Alcrona	E	E	Carbide Alcrona
P	**Tool Steel**	—	K	M	M, K	K	Carbide TiAlN	M*	M*	Carbide TiAlN
S	**High-Temp Alloy**	—	G	M	M	G	Carbide TiAlN	M*	M*	Carbide TiAlN
S	**Titanium Alloys**	—	T	—	—	T	Carbide T	E	E	Carbide T
M	**Austenitic Stainless Steel** 304, 316, etc.	—	K	M	M, K	K	Carbide Alcrona	M	M	Carbide Alcrona
M	**Ferritic Martensitic Stainless Steel** 416, 420, 17-4PH, 15-5PH, etc.	—	N	E	K	K	Cermet or Carbide Alcrona	E	E	Carbide Alcrona
K	**Ductile Cast Iron** Spheroidal - GS500	<130	V	E	E	V	Carbide Alcrona	E	E	Carbide Alcrona
K		130+	V	E	E	V	Cermet Alcrona	E	E	Carbide Alcrona
K	**Grey Cast Iron** GC15 - GC20 - GC25 - GC35	—	V	E	E	V	Carbide TiAlN	E	E	Carbide TiAlN
N	**Bronze Brass Copper**	<300	—	E	K	K	Carbide TiN	E	E	Carbide TiN
N	**Aluminum**	< 7% Si	V	E	E	V	Carbide Uncoated	E	E	Carbide Uncoated
N		7% Si+	G	E	E	G	PCD Uncoated	E	E	PCD Uncoated

*Contact our Application Engineering department for special geometries to improve tool life.

Lead-in Angle Information

Straight Flute

Lead-in	Angles	Chip Evacuation	Description
A	45°, 8°		Lead-in can be used to improve finish.
F	90°		Can be used for stock removal at the bottom of the hole. Reduce the feed by 40% of the values on the recommended cutting data pages.
G	45°		Standard and suitable for most materials.
L	75°		May provide improved straightness. Reduce the feed by 40% of the values on the recommended cutting data pages.
N	20°		Ideal for through holes. It is possible to increase the feed up to 100% of the values on the recommended cutting data pages.
T	30°		Suitable for titanium based alloys.
V	45°		Suitable for most materials and increases tool life
K	80°, 0.10x45°		Excellent at breaking small chips that are easy to evacuate in blind hole applications. Requires 50% increased feed rate, which will result in reduced tool life when compared to other leads.

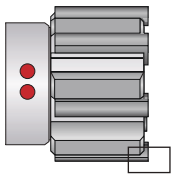

Straight

Helical Flute (Right-Hand) - *Blind Hole Applications Only*

Lead-in	Angles	Chip Evacuation	Description
E	25°		Standard and suitable for most materials.
M	45°		May provide better penetration rates in steels over 200 BHN.
K	80°, 0.10x45°		Excellent at breaking small chips that are easy to evacuate in blind hole applications. Requires 50% increased feed rate, which will result in reduced tool life when compared to other leads.

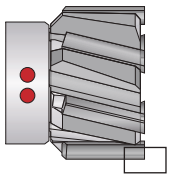

Helical

Helical Flute (Left-Hand) - *Through Hole Applications Only*

Lead-in	Angles	Chip Evacuation	Description
E	25°		Standard and suitable for most materials. **NOTE:** Through hole applications only.
M	45°		May provide better penetration rates in steels over 200 BHN. **NOTE:** Through hole applications only.

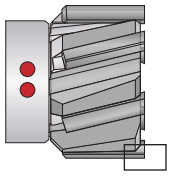

Helical

Coatings, Cutting Materials, and Dimple Indicators

Coating Information

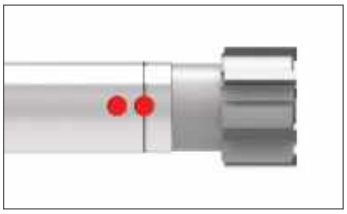

Uncoated
Ideal for nonferrous applications

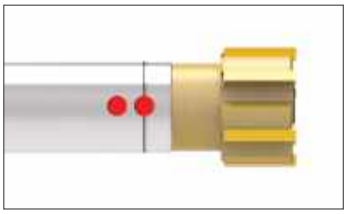

TiN (N)
Ideal for general purpose applications

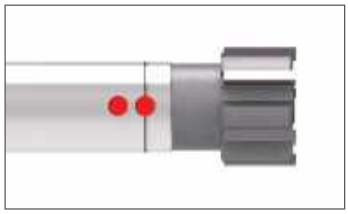

TiAlN (A)
Provides higher heat resistance to improve tool life

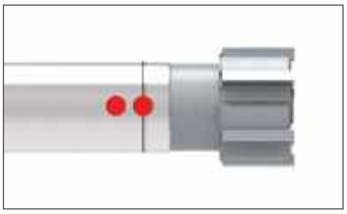

TiCN (C)
Provides improved surface finish

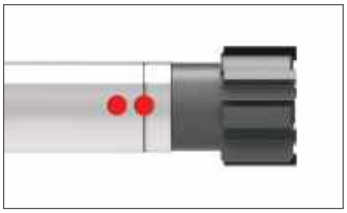

Alcrona (K)
Provides excellent wear resistance and can help increase cutting speeds

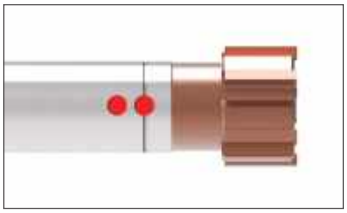

Hardcut (H)
Ideal for cast iron and hardened steel applications

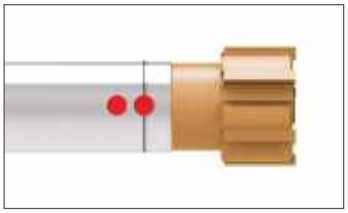

R Coating (R)
Improved tool life in cast iron materials

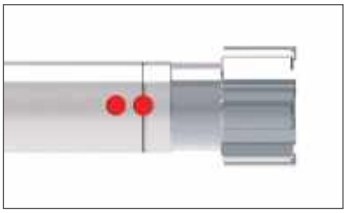

T Coating (T)
Optimized tool life in titanium and very hard materials

Cutting Material Information

Material	Indicator	Details
Carbide	K	A fine-grain carbide suitable for all conventional reaming applications. Recommended where rigidity is not excellent and speeds must be reduced.
Cermet	S	Cermet provides high wear resistance and is recommended for abrasive and increased speed applications. Not recommended for poor rigidity or interrupted cuts.

Dimple Indicators

Material	Replaceable Head Style		Monobloc Style	Cutting Ring Style
	9000 Series	7000 and 5000 Series		
Carbide	Chamfered Profile	Two Dimples	Two Dimples	Two Dimples
Cermet	Sharp Edge Profile	Two Dimples with Line	Two Dimples with Line	Two Dimples with Line

NOTE: The dimple location also indicates which two cutting teeth are 180° opposed.

Replaceable Head Reamers

Product Overview

Expandable Heads

5000 Series	7000 Series
• 0.3780" - 1.2835" (9.600 mm - 32.600 mm) • Heads arrive set to finish diameter and specified tolerance. • Twist-lock heads for precision locating of the head to the mandrel. • Best TIR repeatability from head to head providing consistent tool wear and maximized tool life.	• 0.4646" - 2.3862" (11.800 mm - 60.609 mm) • Multiple diameters within the same arbor reduce inventory requirements. • Coolant configurations for blind and through hole applications. • Reamer head reconditions are available upon request. • Expands up to 1% on diameter to accommodate for wear. • ± 0.0002" (0.005 mm) tolerance capability.

Fixed Heads

7000 Series	9000 Series
• 0.4646" - 2.3862" (11.800 mm - 60.609 mm) • 2.3863" - 3.1732" (60.610 mm - 80.600 mm) diameters available as specials by contacting Application Engineering. • Multiple diameters within the same arbor reduce inventory requirements. • Coolant configurations for blind and through hole applications. • Reamer head reconditions are available upon request. • Nonexpanding diameter for simple on-machine replacement. • H7 tolerance capability.	• 0.4646" - 1.5984" (11.800 mm - 40.600 mm) • Heads are precision ground to finish diameter. • Quick-change heads require minimal downtime for replacement. • Sintered carbide or cermet design provides improved rigidity in difficult applications. • H7 tolerance capability.

Coatings

Uncoated	TiN	TiAlN	TiCN	Alcrona	Hardcut	R Coating	T Coating

Reference Key

Symbol	Attribute
D_1	Reamer head diameter
D_2	Shank diameter
L_1	Overall length
L_2	Length of cut
H	Hex key (listed with screws)

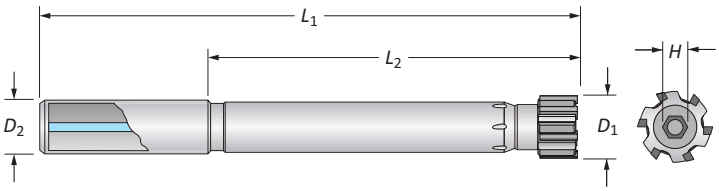

Mandrel Shanks Available:

- Cylindrical
- Modular Connection

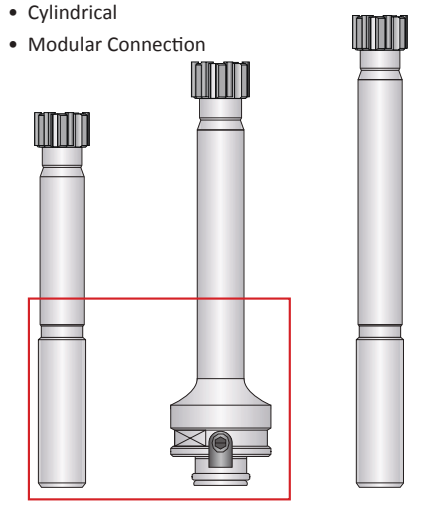

Product Nomenclature

7000 Series Replaceable Reamer Heads

I	7400	–	K	N	G	–	10000
1	2		3	4	5		7

1. Diameter Unit of Measure

Blank = Metric diameter (mm)

I = Imperial diameter (in)

NOTE: For reconditions, put an "R" at the beginning of the item number (7000 series only).

2. Series

Expandable	Fixed
7405	7400
7605	7600
7705	7700

3. Substrate

K = Carbide

S = Cermet

4. Coating

L = Uncoated carbide	**K** = Alcrona
V = Uncoated cermet	**H** = Hardcut
N = TiN	**R** = R coating
C = TiCN	**T** = T coating
A = TiAlN	

5. Lead-in

A, F, G, L, N, T, V = Straight flute

E, M = Helical Flute (right-hand or left-hand)

K = Chipbreaker geometry (straight or right-hand helical)

6. Diameter (D_1)

XXXXX = X.XXXX" (Imperial)

XXXXX = XX.XXX mm (Metric)

Note: Contact Application Engineering about optional add-on features for 7000 series.

9000/5000 Series Replaceable Reamer Heads

I	9700	–	K	N	G	H	–	10000	+	0000	–	0008
1	2		3	4	5	6		7		8		

1. Diameter Unit of Measure

Blank = Metric diameter (mm)

I = Imperial diameter (in)

2. Series

5000 Series	9000 Series
5400	9400
5401	9600
5600	9700
5700	

3. Substrate

K = Carbide

S = Cermet

4. Coating

L = Uncoated carbide	**K** = Alcrona
V = Uncoated cermet	**H** = Hardcut
N = TiN	**R** = R coating
C = TiCN	**T** = T coating
A = TiAlN	

5. Lead-in

A, F, G, L, N, T, V = Straight flute

E, M = Helical Flute (right-hand or left-hand)

K = Chipbreaker geometry (straight or right-hand helical)

6. Optional add-on

Blank = No add-on

H = Half circular face

Z = Double back taper

HZ = Half circular face and double back taper

7. Diameter (D_1)

XXXXX = X.XXXX" (Imperial)

XXXXX = XX.XXX mm (Metric)

8. Tolerance*

4 decimal places = inch tolerance

3 decimal places = mm tolerance

*The total tolerance capable for 5000 series reamers is 0.0002" (0.005 mm) and H7 for 9000 series reamers.

Series Details

Series		5000 Series				7000 Series						9000 Series		
		5400	5401	5600	5700	7405	7605	7705	7400	7600	7700	9400	9600	9700
Flute	Straight	●	●			●			●			●		
	Right-hand helical			●			●			●			●	
	Left-hand helical				●			●			●			●
Head	Fixed								●	●	●	●	●	●
	Expandable	●	●	●	●	●	●	●						
Coolant	Radial *(through hole)*	●			●	–	–	–	–	–	–	–	–	–
	Central *(blind hole)*		●	●		–	–	–	–	–	–	–	–	–

Replaceable Head Reamers

7000 SERIES

0.4646" - 3.1732" *(11.800 mm - 80.600 mm)*

- Features both expandable and fixed diameter heads.
- Multiple diameters within the same arbor reduce inventory requirements.
- Coolant configurations for blind and through hole applications.
- Available with brazed carbide, cermet, or PCD cutting edges.
- Reamer head reconditions are available upon request.

fixed head reamers

- Nonexpanding diameter for simple on-machine replacement.
- H7 tolerance capability.

expandable head reamers

- Expands to accommodate for wear.
- ± 0.0002" (0.005 mm) tolerance capability.

Lead Time in Workdays

7000 Series		2 - 5 pcs	6 - 19 pcs	20+ pcs
Fixed	Coated	20	25	25
	Uncoated	15	20	20
Expandable	Coated	20	25	30
	Uncoated	15	20	25

Building Your Complete Tool

You will need all three pieces to complete your replaceable head reamer assembly. The item numbers for the screws and the mandrels are listed on their respective pages. However, there is a guide on the pages where the heads are located. You must follow the guide to build the item number for the reamer head that you need.

The complete mandrel item numbers are listed on their respective pages. You do not need to build the mandrel numbers.

1

Select Your Head

2

Select Your Screw

3

Select Your Mandrel

Replaceable Heads

Expandable | 7000 Series

Build Your Part No.

1 Series

7405 Series	7605 Series	7705 Series

2 Flute Style

Your flute style is based on your series selection (above).

Straight Flute	Helical Flute (Right-Hand)	Helical Flute (Left-Hand)

3 Carbide Grade and Coating Codes

These are the combinations of grades and coatings you can choose from.

	Uncoated	TiN	TiCN	TiAlN	Alcrona	Hardcut	R Coating	T Coating
Carbide	KL	KN	KC	KA	KK	KH	KR	KT
Cermet	SV	SN	SC	SA	SK	SH	SR	ST

4 Lead-in Recommendations

	T	F	N	G	L	A	V	K
P			●	●		◐	○	◐
S	●			◐				
M			◐	●				◐
H			◐	●				
K				◐			●	◐
N				●			◐	

	E	M	K
P	●		◐
S	●	◐	
M	●		◐
H	◐	●	
K	◐	●	◐
N	●	◐	

	E	M
P	●	
S	●	◐
M	●	
H	◐	●
K	◐	●
N	●	◐

5 Diameter

For the diameter portion of the item number, refer to the following tables:

Imperial (in)		Metric (mm)	
D_1 Range	Tolerance (min/max)	D_1 Range	Tolerance (min/max)
0.4646 - 0.7086	-0.0002 / +0.0002	11.800 - 18.000	-0.005 / +0.005
0.7087 - 1.1810		18.001 - 30.000	
1.1811 - 1.5747		30.001 - 40.000	
1.5748 - 1.9684		40.001 - 50.000	
1.9685 - 2.3862		50.001 - 60.609	

● Best ◐ Better ○ Good

Ordering Example:

The customer needs the following:

- Straight fluted 7000 series reamer head
- Expandable style
- Carbide
- TiN coating
- G lead-in
- 50.000 mm diameter

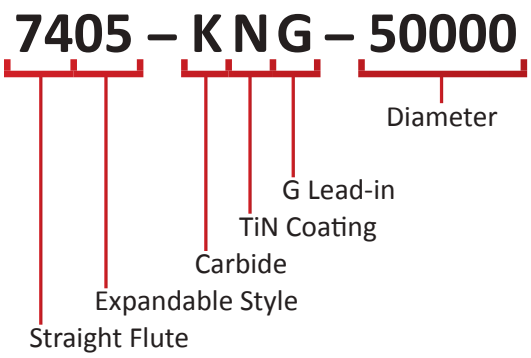

C: 68 - 87

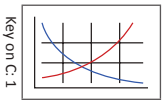

Key on C: 1

C: 15 - 16

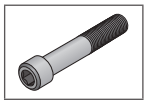

C: 17 - 19

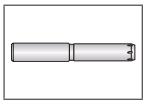

C: 60 - 65

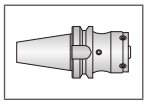

C: 88

A DRILLING
B BORING
C REAMING
D BURNISHING
E THREADING
X SPECIALS

Replaceable Heads

Fixed | 7000 Series

Build Your Part No.

1 Series

7400 Series	7600 Series	7700 Series

2 Flute Style

Your flute style is based on your series selection (above).

Straight Flute	Helical Flute (Right-Hand)	Helical Flute (Left-Hand)

3 Carbide Grade and Coating Codes

These are the combinations of grades and coatings you can choose from.

	Uncoated	TiN	TiCN	TiAlN	Alcrona	Hardcut	R Coating	T Coating
Carbide	KL	KN	KC	KA	KK	KH	KR	KT
Cermet	SV	SN	SC	SA	SK	SH	SR	ST

4 Lead-in Recommendations

	T	F	N	G	L	A	V	K
P			●	●		◐	○	◐
S	●			◐				
M			◐	●				◐
H			◐	●				
K				◐			●	◐
N				●			◐	

	E	M	K
P	●		◐
S	●	◐	
M	●		◐
H	◐	●	
K	◐	●	◐
N	●	◐	

	E	M
P	●	
S	●	◐
M	●	
H	◐	●
K	◐	●
N	●	◐

5 Diameter (H7 Tolerance)

For the diameter portion of the item number, refer to the following tables:

Imperial (in)		Metric (mm)	
D_1 Range	Tolerance (min/max)	D_1 Range	Tolerance (min/max)
0.4646 - 0.7086	+0 / +0.0007	11.800 - 18.000	+0 / +0.018
0.7087 - 1.1810	+0 / +0.0008	18.001 - 30.000	+0 / +0.021
1.1811 - 1.9684	+0 / +0.0010	30.001 - 50.000	+0 / +0.025
1.9685 - 2.3862	+0 / +0.0012	50.001 - 60.609	+0 / +0.030

2.3863" - 3.1732" (60.610 mm - 80.600 mm) diameters are available as specials by contacting Application Engineering.

● Best ◐ Better ○ Good

Ordering Example:

The customer needs the following:

- Straight fluted 7000 series reamer head
- Fixed style
- Carbide
- TiN coating
- G lead-in
- 2.0000" diameter
- H7 tolerance +0/ +0.0012" for 2.0000" diameter

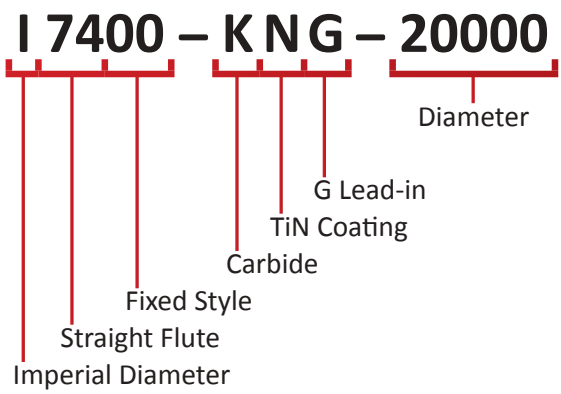

C: 68 - 87 C: 15 - 16 C: 17 - 19 C: 60 - 65 C: 88
Key on C: 1

Replaceable Head Screws

Fixed | 7000 Series

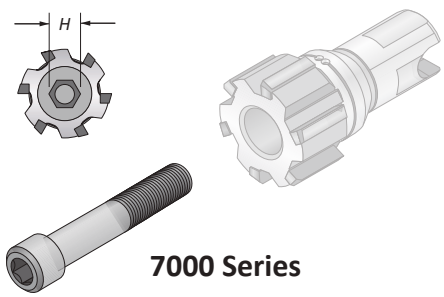

7000 Series

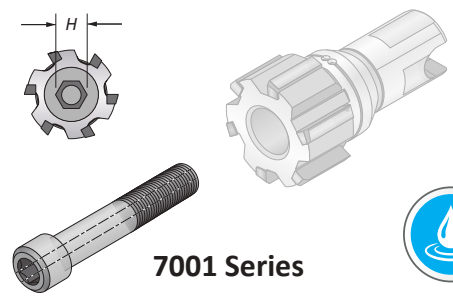

7001 Series

D_1 Range* Imperial (in)	D_1 Range* Metric (mm)	Part No.	*H* (mm)
0.4646 - 0.5751	11.800 - 14.609	**7000-VI-001**	2.5
0.5752 - 0.6932	14.610 - 17.609	**7000-VI-002**	3
0.6933 - 0.8507	17.610 - 21.609	**7000-VI-003**	4
0.8508 - 1.0475	21.610 - 26.609	**7000-VI-004**	5
1.0476 - 1.2838	26.610 - 32.609	**7000-VI-005**	6
1.2839 - 1.5987	32.610 - 40.609	**7000-VI-006**	6
1.5988 - 1.9924	40.610 - 50.609	**7000-VI-007**	8
1.9925 - 2.3862	50.610 - 60.609	**7000-VI-008**	10
2.3863 - 3.1732	60.610 - 80.600	**7000-VI-009**	12

D_1 Range* Imperial (in)	D_1 Range* Metric (mm)	Part No.	*H* (mm)
0.4646 - 0.5751	11.800 - 14.609	**7001-VI-001**	2.5
0.5752 - 0.6932	14.610 - 17.609	**7001-VI-002**	3
0.6933 - 0.8507	17.610 - 21.609	**7001-VI-003**	4
0.8508 - 1.0475	21.610 - 26.609	**7001-VI-004**	5
1.0476 - 1.2838	26.610 - 32.609	**7001-VI-005**	6
1.2839 - 1.5987	32.610 - 40.609	**7001-VI-006**	6
1.5988 - 1.9924	40.610 - 50.609	**7001-VI-007**	8
1.9925 - 2.3862	50.610 - 60.609	**7001-VI-008**	10
2.3863 - 3.1732	60.610 - 80.600	**7001-VI-009**	12

* 2.3863" - 3.1732" (60.610 mm - 80.600 mm) diameter heads are available as specials by contacting Application Engineering.

7000 Series Locking Screws

Radial Coolant Only	No Coolant
7000 Series Mandrels	7001 Series Mandrels

7001 Series Locking Screws

Radial and Central Coolant	Central Coolant Only
7000 Series Mandrels	7001 Series Mandrels

C: 68 - 87 | C: 13 - 14 | C: 17 - 19 | C: 60 - 65 | C: 88

Key on C: 1

Replaceable Head Screws

Expandable | 7000 Series

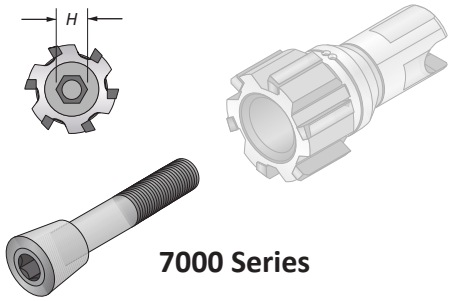

7000 Series

D_1 Range Imperial (in)	D_1 Range Metric (mm)	Part No.	H (mm)
0.4646 - 0.4964	11.800 - 12.609	**7000-VI-012**	3.5
0.4965 - 0.5357	12.610 - 13.609	**7000-VI-013**	3.5
0.5358 - 0.5751	13.610 - 14.609	**7000-VI-014**	3.5
0.5752 - 0.6145	14.610 - 15.609	**7000-VI-015**	4
0.6146 - 0.6538	15.610 - 16.609	**7000-VI-016**	4
0.6539 - 0.6932	16.610 - 17.609	**7000-VI-017**	4
0.6933 - 0.7326	17.610 - 18.609	**7000-VI-018**	5
0.7327 - 0.7719	18.610 - 19.609	**7000-VI-019**	5
0.7720 - 0.8113	19.610 - 20.609	**7000-VI-020**	5
0.8114 - 0.8507	20.610 - 21.609	**7000-VI-021**	5
0.8508 - 0.8901	21.610 - 22.609	**7000-VI-022**	6
0.8902 - 0.9294	22.610 - 23.609	**7000-VI-023**	6
0.9295 - 0.9688	23.610 - 24.609	**7000-VI-024**	6
0.9689 - 1.0082	24.610 - 25.609	**7000-VI-025**	6
1.0083 - 1.0475	25.610 - 26.609	**7000-VI-026**	6
1.0476 - 1.0869	26.610 - 27.609	**7000-VI-027**	8
1.0870 - 1.1263	27.610 - 28.609	**7000-VI-028**	8
1.1264 - 1.1656	28.610 - 29.609	**7000-VI-029**	8
1.1657 - 1.2050	29.610 - 30.609	**7000-VI-030**	8
1.2051 - 1.2444	30.610 - 31.609	**7000-VI-031**	8
1.2445 - 1.2838	31.610 - 32.609	**7000-VI-032**	8
1.2839 - 1.3231	32.610 - 33.609	**7000-VI-033**	10
1.3232 - 1.3625	33.610 - 34.609	**7000-VI-034**	10
1.3626 - 1.4019	34.610 - 35.609	**7000-VI-035**	10
1.4020 - 1.4412	35.610 - 36.609	**7000-VI-036**	10
1.4413 - 1.4806	36.610 - 37.609	**7000-VI-037**	10
1.4807 - 1.5200	37.610 - 38.609	**7000-VI-038**	10
1.5201 - 1.5593	38.610 - 39.609	**7000-VI-039**	10
1.5594 - 1.5987	39.610 - 40.609	**7000-VI-040**	10
1.5988 - 1.6381	40.610 - 41.609	**7000-VI-041**	12
1.6382 - 1.6775	41.610 - 42.609	**7000-VI-042**	12
1.6776 - 1.7168	42.610 - 43.609	**7000-VI-043**	12
1.7169 - 1.7562	43.610 - 44.609	**7000-VI-044**	12
1.7563 - 1.7956	44.610 - 45.609	**7000-VI-045**	12
1.7957 - 1.8349	45.610 - 46.609	**7000-VI-046**	12
1.8350 - 1.8743	46.610 - 47.609	**7000-VI-047**	12
1.8744 - 1.9137	47.610 - 48.609	**7000-VI-048**	12
1.9138 - 1.9530	48.610 - 49.609	**7000-VI-049**	12
1.9531 - 1.9924	49.610 - 50.609	**7000-VI-050**	12
1.9925 - 2.0318	50.610 - 51.609	**7000-VI-051**	12
2.0319 - 2.0712	51.610 - 52.609	**7000-VI-052**	12
2.0713 - 2.1105	52.610 - 53.609	**7000-VI-053**	12
2.1106 - 2.1499	53.610 - 54.609	**7000-VI-054**	12
2.1500 - 2.1893	54.610 - 55.609	**7000-VI-055**	12
2.1894 - 2.2286	55.610 - 56.609	**7000-VI-056**	12
2.2287 - 2.2680	56.610 - 57.609	**7000-VI-057**	12
2.2681 - 2.3074	57.610 - 58.609	**7000-VI-058**	12
2.3075 - 2.3468	58.610 - 59.609	**7000-VI-059**	12
2.3469 - 2.3862	59.610 - 60.609	**7000-VI-060**	12

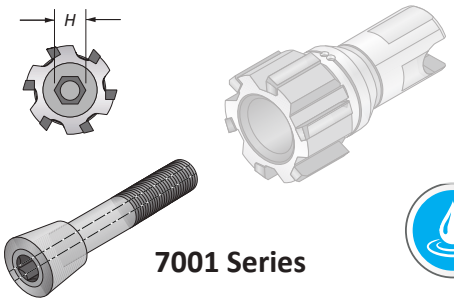

7001 Series

D_1 Range Imperial (in)	D_1 Range Metric (mm)	Part No.	H (mm)
0.4646 - 0.4964	11.800 - 12.609	**7001-VI-012**	3.5
0.4965 - 0.5357	12.610 - 13.609	**7001-VI-013**	3.5
0.5358 - 0.5751	13.610 - 14.609	**7001-VI-014**	3.5
0.5752 - 0.6145	14.610 - 15.609	**7001-VI-015**	4
0.6146 - 0.6538	15.610 - 16.609	**7001-VI-016**	4
0.6539 - 0.6932	16.610 - 17.609	**7001-VI-017**	4
0.6933 - 0.7326	17.610 - 18.609	**7001-VI-018**	5
0.7327 - 0.7719	18.610 - 19.609	**7001-VI-019**	5
0.7720 - 0.8113	19.610 - 20.609	**7001-VI-020**	5
0.8114 - 0.8507	20.610 - 21.609	**7001-VI-021**	5
0.8508 - 0.8901	21.610 - 22.609	**7001-VI-022**	6
0.8902 - 0.9294	22.610 - 23.609	**7001-VI-023**	6
0.9295 - 0.9688	23.610 - 24.609	**7001-VI-024**	6
0.9689 - 1.0082	24.610 - 25.609	**7001-VI-025**	6
1.0083 - 1.0475	25.610 - 26.609	**7001-VI-026**	6
1.0476 - 1.0869	26.610 - 27.609	**7001-VI-027**	8
1.0870 - 1.1263	27.610 - 28.609	**7001-VI-028**	8
1.1264 - 1.1656	28.610 - 29.609	**7001-VI-029**	8
1.1657 - 1.2050	29.610 - 30.609	**7001-VI-030**	8
1.2051 - 1.2444	30.610 - 31.609	**7001-VI-031**	8
1.2445 - 1.2838	31.610 - 32.609	**7001-VI-032**	8
1.2839 - 1.3231	32.610 - 33.609	**7001-VI-033**	10
1.3232 - 1.3625	33.610 - 34.609	**7001-VI-034**	10
1.3626 - 1.4019	34.610 - 35.609	**7001-VI-035**	10
1.4020 - 1.4412	35.610 - 36.609	**7001-VI-036**	10
1.4413 - 1.4806	36.610 - 37.609	**7001-VI-037**	10
1.4807 - 1.5200	37.610 - 38.609	**7001-VI-038**	10
1.5201 - 1.5593	38.610 - 39.609	**7001-VI-039**	10
1.5594 - 1.5987	39.610 - 40.609	**7001-VI-040**	10
1.5988 - 1.6381	40.610 - 41.609	**7001-VI-041**	12
1.6382 - 1.6775	41.610 - 42.609	**7001-VI-042**	12
1.6776 - 1.7168	42.610 - 43.609	**7001-VI-043**	12
1.7169 - 1.7562	43.610 - 44.609	**7001-VI-044**	12
1.7563 - 1.7956	44.610 - 45.609	**7001-VI-045**	12
1.7957 - 1.8349	45.610 - 46.609	**7001-VI-046**	12
1.8350 - 1.8743	46.610 - 47.609	**7001-VI-047**	12
1.8744 - 1.9137	47.610 - 48.609	**7001-VI-048**	12
1.9138 - 1.9530	48.610 - 49.609	**7001-VI-049**	12
1.9531 - 1.9924	49.610 - 50.609	**7001-VI-050**	12
1.9925 - 2.0318	50.610 - 51.609	**7001-VI-051**	12
2.0319 - 2.0712	51.610 - 52.609	**7001-VI-052**	12
2.0713 - 2.1105	52.610 - 53.609	**7001-VI-053**	12
2.1106 - 2.1499	53.610 - 54.609	**7001-VI-054**	12
2.1500 - 2.1893	54.610 - 55.609	**7001-VI-055**	12
2.1894 - 2.2286	55.610 - 56.609	**7001-VI-056**	12
2.2287 - 2.2680	56.610 - 57.609	**7001-VI-057**	12
2.2681 - 2.3074	57.610 - 58.609	**7001-VI-058**	12
2.3075 - 2.3468	58.610 - 59.609	**7001-VI-059**	12
2.3469 - 2.3862	59.610 - 60.609	**7001-VI-060**	12

C: 68 - 87

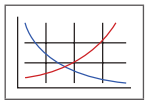

C: 13 - 14

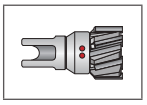

C: 17 - 19

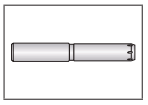

C: 60 - 65

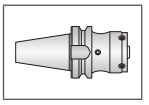

C: 88

Replaceable Head Mandrels

7000 Series | Diameter Range: 0.4646" - 3.1732" (11.800 mm - 80.600 mm)

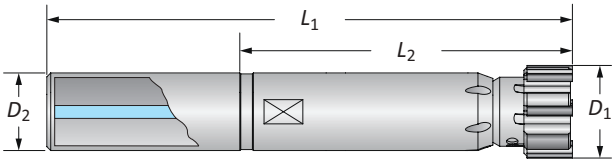

Cylindrical Shank | Short

D_1 Range*		Mandrel				Part No.	
Imperial (in)	Metric (mm)	L_2 (mm)	L_1 (mm)	D_2 (mm)	No. of Teeth	7000 Series	7001 Series
0.4646 - 0.5751	11.800 - 14.609	50	95	12	6	**7000-MC-001**	**7001-MC-001**
0.5752 - 0.6932	14.610 - 17.609	65	113	16	6	**7000-MC-002**	**7001-MC-002**
0.6933 - 0.8507	17.610 - 21.609	75	125	20	6	**7000-MC-003**	**7001-MC-003**
0.8508 - 1.0475	21.610 - 26.609	85	135	20	6	**7000-MC-004**	**7001-MC-004**
1.0476 - 1.2838	26.610 - 32.609	105	161	25	6	**7000-MC-005**	**7001-MC-005**
1.2839 - 1.5987	32.610 - 40.609	120	180	32	6	**7000-MC-006**	**7001-MC-006**
1.5988 - 1.7956	40.610 - 45.609	120	180	32	6	**7000-MC-007**	**7001-MC-007**
1.7957 - 1.9924	45.610 - 50.609	120	180	32	8	**7000-MC-075**	**7001-MC-075**
1.9925 - 2.3862	50.610 - 60.609	120	190	32	8	**7000-MC-008**	**7001-MC-008**
2.3863 - 3.1732	60.610 - 80.600	120	180	32	8/10/12	**7000-MC-009**	—

Cylindrical Shank | Long

D_1 Range*		Mandrel				Part No.	
Imperial (in)	Metric (mm)	L_2 (mm)	L_1 (mm)	D_2 (mm)	No. of Teeth	7000 Series	7001 Series
0.4646 - 0.5751	11.800 - 14.609	95	140	12	6	**7000-ML-001**	**7001-ML-001**
0.5752 - 0.6932	14.610 - 17.609	105	153	16	6	**7000-ML-002**	**7001-ML-002**
0.6933 - 0.8507	17.610 - 21.609	125	175	20	6	**7000-ML-003**	**7001-ML-003**
0.8508 - 1.0475	21.610 - 26.609	145	195	20	6	**7000-ML-004**	**7001-ML-004**
1.0476 - 1.2838	26.610 - 32.609	165	221	25	6	**7000-ML-005**	**7001-ML-005**
1.2839 - 1.5987	32.610 - 40.609	185	245	32	6	**7000-ML-006**	**7001-ML-006**
1.5988 - 1.7956	40.610 - 45.609	185	245	32	6	**7000-ML-007**	**7001-ML-007**
1.7957 - 1.9924	45.610 - 50.609	185	245	32	8	**7000-ML-075**	**7001-ML-075**
1.9925 - 2.3862	50.610 - 60.609	185	255	32	8	**7000-ML-008**	**7001-ML-008**
2.3863 - 3.1732	60.610 - 80.600	185	245	32	8/10/12	**7000-ML-009**	—

*2.3863" - 3.1732" (60.610 mm - 80.600 mm) diameter heads are available as specials by contacting Application Engineering.

7000 Series Mandrels

Radial Coolant Only	Radial and Central Coolant
7000 Series Locking Screw	7001 Series Locking Screw

7001 Series Mandrels

No Coolant	Central Coolant Only
7000 Series Locking Screw	7001 Series Locking Screw

C: 68 - 87

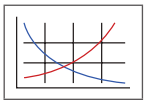

Key on C: 1

C: 13 - 14

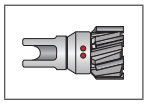

C: 15 - 16

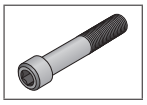

C: 60 - 65

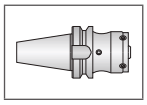

C: 88

Application recommendation:

- Through hole application = radial coolant
- Blind hole application = central coolant

Replaceable Head Mandrels

7000 Series | Diameter Range: 0.4646" - 3.1732" (11.800 mm - 80.600 mm)

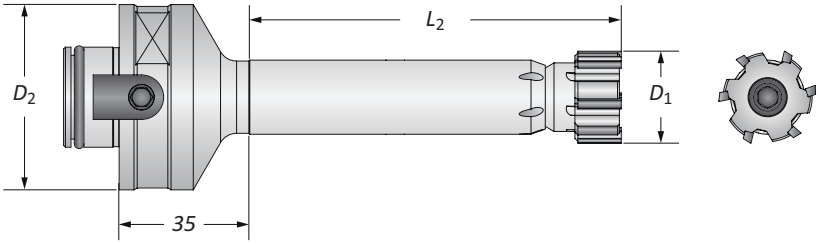

Modular Shank | Standard

D_1 Range*		Mandrel			Part No.	
Imperial (in)	Metric (mm)	L_2 (mm)	D_2 (mm)	No. of Teeth	7000 Series	7001 Series
0.4646 - 0.5751	11.800 - 14.609	65	50	6	**7000-MM-001**	**7001-MM-001**
0.5752 - 0.6932	14.610 - 17.609	80	50	6	**7000-MM-002**	**7001-MM-002**
0.6933 - 0.8507	17.610 - 21.609	90	50	6	**7000-MM-003**	**7001-MM-003**
0.8508 - 1.0475	21.610 - 26.609	100	50	6	**7000-MM-004**	**7001-MM-004**
1.0476 - 1.2838	26.610 - 32.609	110	50	6	**7000-MM-005**	**7001-MM-005**
1.2839 - 1.5987	32.610 - 40.609	120	50	6	**7000-MM-006**	**7001-MM-006**
1.5988 - 1.7956	40.610 - 45.609	120	50	6	**7000-MM-007**	**7001-MM-007**
1.7957 - 1.9924	45.610 - 50.609	120	50	8	**7000-MM-075**	**7001-MM-075**
1.9925 - 2.3862	50.610 - 60.609	120	50	8	**7000-MM-008**	**7001-MM-008**
2.3863 - 3.1732	60.610 - 80.600	120	63	8/10/12	**7000-MM-009**	—

*2.3863" - 3.1732" (60.610 mm - 80.600 mm) diameter heads are available as specials by contacting Application Engineering.

7000 Series Mandrels

Radial Coolant Only	Radial and Central Coolant
7000 Series Locking Screw	7001 Series Locking Screw

7001 Series Mandrels

No Coolant	Central Coolant Only
7000 Series Locking Screw	7001 Series Locking Screw

C: 68 - 87
Key on C: 1
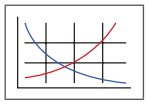
C: 13 - 14
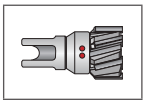
C: 15 - 16
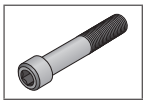
C: 60 - 65
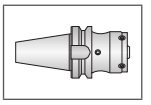
C: 88

Application recommendation:

- Through hole application = radial coolant
- Blind hole application = central coolant

Replaceable Head Mandrels

7000 Series | AR Upper Receiver | Diameter Range: 1.0000" - 1.1875" (25.400 mm - 30.163 mm)

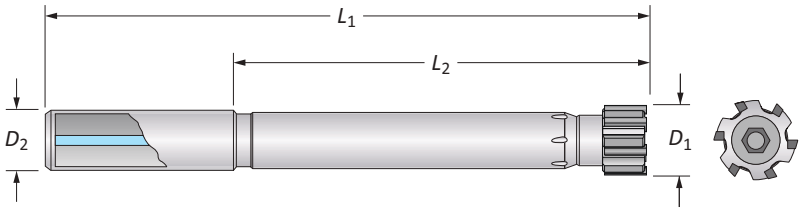

D_1		Mandrel				Part No.
Imperial (in)	Metric (mm)	L_2 (in)	L_1 (in)	D_2 (in)	No. of Teeth	7000 Series
1.1875	30.163	9.65	11.65	0.75	6	**7000-MC-AR10**
1.0000	25.400	8.66	10.63	0.75	6	**7000-MC-AR15**

Achieve the ***long length of cut*** and ***surface finish*** you need.

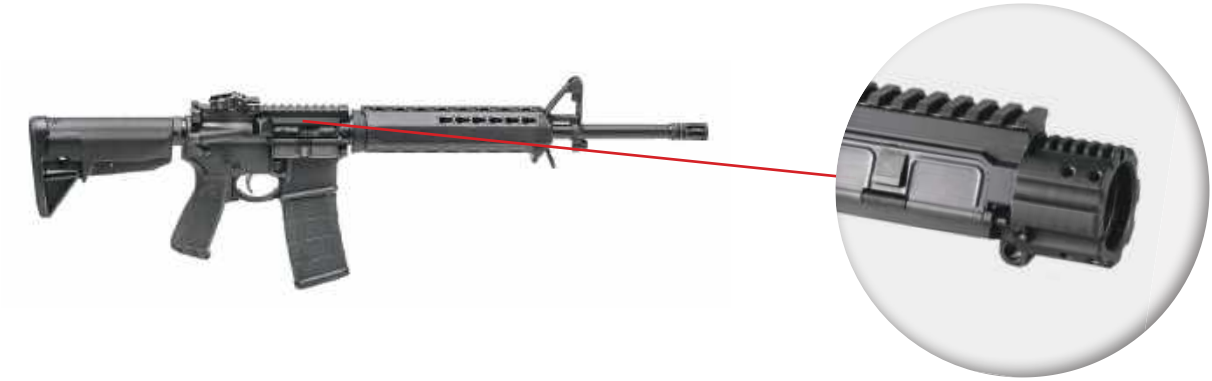

CASE STUDY | AR15 Upper Receiver

Material: 6061 T6 Aluminum

Measure	Carbide-Tipped Chucking Reamer	ALVAN® Replaceable Head Reamer
RPM	1146	2559
Speed	300 SFM	670 SFM
Feed In	0.018 IPR (20.6 IPM)	0.045 IPR (115 IPM)
Feed Out	0.018 IPR (20.6 IPM)	0.090 IPR (230.3 IPM)
Finish	63 Ra	32 Ra
Follow-Up Process	Roller Burnish	None
Cycle Time	0:00:55	0:00:09
Cost Per Hole	$0.77	$0.26
Total Parts	3,500	3,500
Total Cost	$2,691.18	$933.84

SURFACE FINISH 32 Ra
no burnishing required

123% ↑ SPEED

150% ↑ FEED

84% ↓ CYCLE TIME

65% ↓ TOTAL COSTS

C: 68 - 87
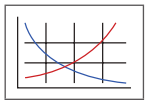
Key on C: 1

C: 13 - 14
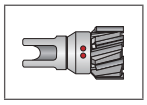

C: 15 - 16
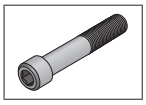

C: 60 - 65
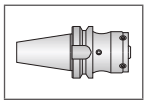

C: 88

Application recommendation:

- Through hole application = radial coolant
- Blind hole application = central coolant

Replaceable Head Reamers

9000 SERIES

0.4646" - 1.5984" *(11.800 mm - 40.600 mm)*

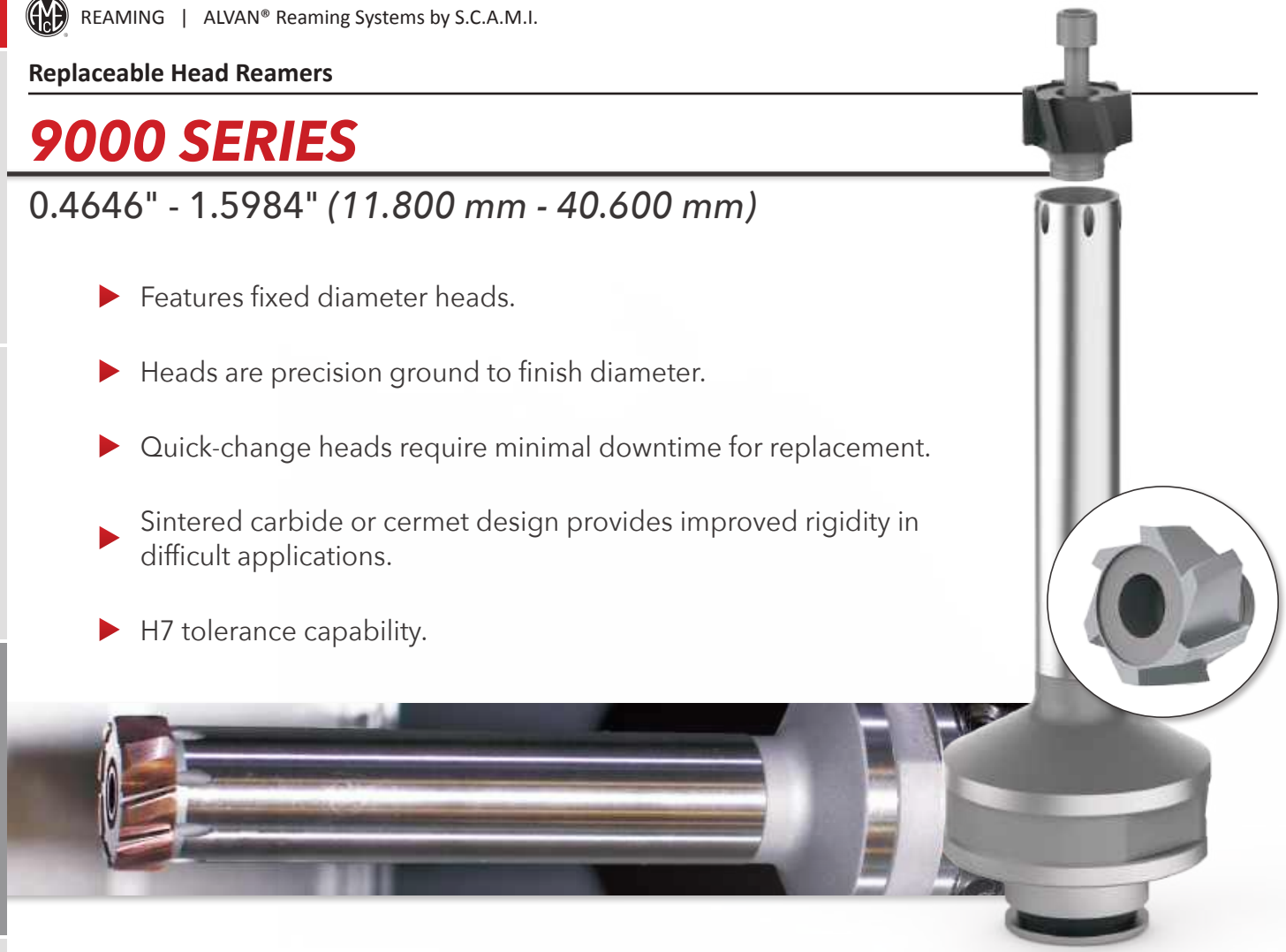

- Features fixed diameter heads.
- Heads are precision ground to finish diameter.
- Quick-change heads require minimal downtime for replacement.
- Sintered carbide or cermet design provides improved rigidity in difficult applications.
- H7 tolerance capability.

Lead Time in Workdays

9000 Series	2 - 9 pcs	10 - 49 pcs	50 - 99 pcs	100+ pcs
Coated	20	25	30	35
Uncoated	15	20	25	30

Building Your Complete Tool

You will need all three pieces to complete your replaceable head reamer assembly. The item numbers for the screws and the mandrels are listed on their respective pages. However, there is a guide on the pages where the heads are located. You must follow the guide to build the item number for the reamer head that you need.

The complete mandrel item numbers are listed on their respective pages. You do not need to build the mandrel numbers.

1

Select Your Head

2

Select Your Screw

3

Select Your Mandrel

Replaceable Heads

Fixed | 9000 Series

Build Your Part No.

1 Series

9400 Series	9600 Series	9700 Series

2 Flute Style

Your flute style is based on your series selection (above).

Straight Flute	Helical Flute (Right-Hand)	Helical Flute (Left-Hand)

3 Carbide Grade and Coating Codes

These are the combinations of grades and coatings you can choose from.

	Uncoated	TiN	TiCN	TiAlN	Alcrona	Hardcut	R Coating	T Coating
Carbide	KL	KN	KC	KA	KK	KH	KR	KT
Cermet	SV	SN	SC	SA	SK	SH	SR	ST

4 Lead-in Recommendations

	T	F	N	G	L	A	V	K
P			●	●		◐	○	◐
S	●			◐				
M			◐	●				◐
H			◐	●				
K				◐			●	◐
N				●			◐	

	E	M	K
P	●		◐
S	●	◐	
M	●		◐
H	◐	●	
K	◐	●	◐
N	●	◐	

	E	M
P	●	
S	●	◐
M	●	
H	◐	●
K	◐	●
N	●	◐

5 Optional Add-ons

Add-on	Indicator	Description
Half Circular Face	H	Provides improved tool life in materials over 25 Rc.
Double Back Taper	Z	Provides improved tool life in materials over 25 Rc but should not be used in applications requiring less than a 32 Ra surface finish.

6 Diameter (H7 Tolerance)

For the diameter portion of the item number, refer to the following tables:

Imperial (in)		Metric (mm)	
D_1 Range	Tolerance (min/max)	D_1 Range	Tolerance (min/max)
0.4646 - 0.7086	+0 / +0.0007	11.800 - 18.000	+0 / +0.018
0.7087 - 1.1810	+0 / +0.0008	18.001 - 30.000	+0 / +0.021
1.1811 - 1.5984	+0 / +0.0010	30.001 - 40.600	+0 / +0.025

● Best ◐ Better ○ Good

Ordering Example:

The customer needs the following:

- Straight fluted 9000 series reamer head
- Fixed style
- Carbide
- TiN coating
- G lead-in
- Half circular face
- 1.0000" diameter
- H7 tolerance +0/ +0.0008" for 1.0000" diameter

I 9400 – K N G H – 10000 + 0008 – 0000

Diameter
Tolerance
Half circular face
G Lead-in
TiN Coating
Carbide
Fixed Style
Straight Flute
Imperial Diameter

C: 68 - 87 | C: 22 | C: 23 | C: 60 - 65 | C: 89

Key on C: 1

Replaceable Head Screws

Fixed | 9000 Series

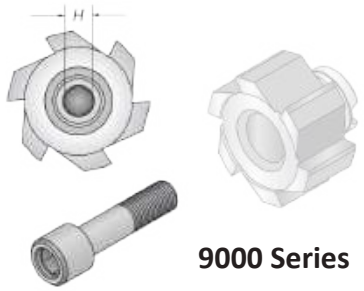

9000 Series

D_1 Range (inch)	D_1 Range (mm)	Part No.	*H* (mm)
0.4646 - 0.5751	11.800 - 14.609	**9000-VI-001**	2.5
0.5752 - 0.6932	14.610 - 17.609	**9000-VI-002**	3
0.6933 - 0.8507	17.610 - 21.609	**9000-VI-003**	4
0.8508 - 1.0475	21.610 - 26.609	**9000-VI-004**	5
1.0476 - 1.2838	26.610 - 32.609	**9000-VI-005**	6
1.2839 - 1.5984	32.610 - 40.600	**9000-VI-006**	6

9000 Series Locking Screws

Radial Coolant Only

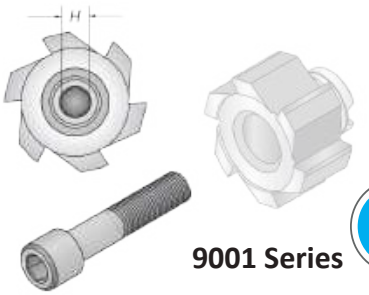

9001 Series

D_1 Range (inch)	D_1 Range (mm)	Part No.	*H* (mm)
0.4646 - 0.5751	11.800 - 14.609	**9001-VI-001**	2.5
0.5752 - 0.6932	14.610 - 17.609	**9001-VI-002**	3
0.6933 - 0.8507	17.610 - 21.609	**9001-VI-003**	4
0.8508 - 1.0475	21.610 - 26.609	**9001-VI-004**	5
1.0476 - 1.2838	26.610 - 32.609	**9001-VI-005**	6
1.2839 - 1.5984	32.610 - 40.600	**9001-VI-006**	6

9001 Series Locking Screws

Central Coolant Only

C: 68 - 87
Key on C: 1
C: 21
C: 23
C: 60 - 65
C: 89

Replaceable Head Mandrels

9000 Series | Diameter Range: 0.4646" - 1.5984" (11.800 mm - 40.600 mm)

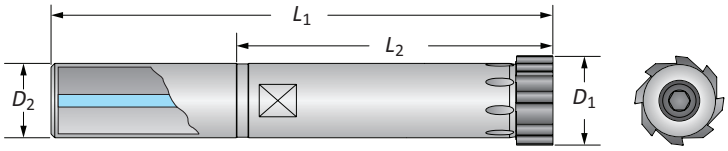

Cylindrical Shank | Short

D_1 Range		Mandrel				
Imperial (in)	Metric (mm)	L_2 (mm)	L_1 (mm)	D_2 (mm)	No. of Teeth	Part No.
0.4646 - 0.5751	11.800 - 14.609	50.00	95.00	12.00	6	**9000-MC-001**
0.5752 - 0.6932	14.610 - 17.609	65.00	113.00	16.00	6	**9000-MC-002**
0.6933 - 0.8507	17.610 - 21.609	75.00	125.00	20.00	6	**9000-MC-003**
0.8508 - 1.0475	21.610 - 26.609	85.00	135.00	20.00	8	**9000-MC-004**
1.0476 - 1.2838	26.610 - 32.609	105.00	161.00	25.00	8	**9000-MC-005**
1.2839 - 1.4412	32.610 - 36.609	120.00	180.00	32.00	10	**9000-MC-006**
1.4413 - 1.5984	36.610 - 40.600	120.00	180.00	32.00	10	**9000-MC-007**

Cylindrical Shank | Long

D_1 Range		Mandrel				
Imperial (in)	Metric (mm)	L_2 (mm)	L_1 (mm)	D_2 (mm)	No. of Teeth	Part No.
0.4646 - 0.5751	11.800 - 14.609	95.00	140.00	12.00	6	**9000-ML-001**
0.5752 - 0.6932	14.610 - 17.609	105.00	153.00	16.00	6	**9000-ML-002**
0.6933 - 0.8507	17.610 - 21.609	125.00	175.00	20.00	6	**9000-ML-003**
0.8508 - 1.0475	21.610 - 26.609	145.00	195.00	20.00	8	**9000-ML-004**
1.0476 - 1.2838	26.610 - 32.609	165.00	221.00	25.00	8	**9000-ML-005**
1.2839 - 1.4412	32.610 - 36.609	185.00	245.00	32.00	10	**9000-ML-006**
1.4413 - 1.5984	36.610 - 40.600	185.00	245.00	32.00	10	**9000-ML-007**

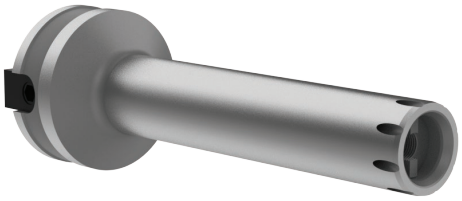

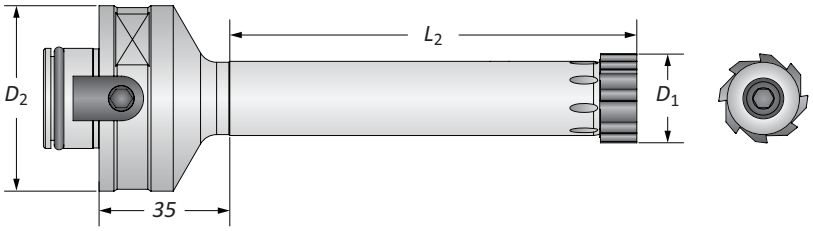

Modular Shank | Standard

D_1 Range		Mandrel			
Imperial (in)	Metric (mm)	L_2 (mm)	D_2 (mm)	No. of Teeth	Part No.
0.4646 - 0.5751	11.800 - 14.609	65.00	50.00	6	**9000-MM-001**
0.5752 - 0.6932	14.610 - 17.609	80.00	50.00	6	**9000-MM-002**
0.6933 - 0.8507	17.610 - 21.609	100.00	50.00	6	**9000-MM-003**
0.8508 - 1.0475	21.610 - 26.609	110.00	50.00	8	**9000-MM-004**
1.0476 - 1.2838	26.610 - 32.609	120.00	50.00	8	**9000-MM-005**
1.2839 - 1.4412	32.610 - 36.609	120.00	50.00	10	**9000-MM-006**
1.4413 - 1.5984	36.610 - 40.600	120.00	50.00	10	**9000-MM-007**

C: 68 - 87

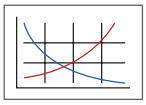

Key on C: 1

C: 21

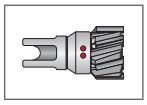

C: 22

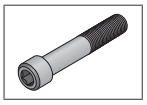

C: 60 - 65

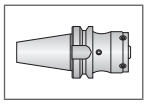

C: 89

Replaceable Head Reamers

5000 SERIES

0.3780" - 1.2835" *(9.600 mm - 32.600 mm)*

- Features expandable diameter heads.
- Heads arrive set to finish diameter and specified tolerance.
- Twist-lock heads for precision locating of the head to the mandrel.
- Best TIR repeatability from head to head providing consistent tool wear and maximized tool life.
- Available with brazed carbide or cermet cutting edges.

Lead Time in Workdays

5000 Series	2 - 9 pcs	10 - 49 pcs	50 - 99 pcs	100+ pcs
Coated	20	25	30	35
Uncoated	15	20	25	30

Building Your Complete Tool

You will need both pieces to complete your replaceable head reamer assembly. The complete mandrel item numbers are listed on their respective pages. However, there is a guide on the pages where the heads are located. You must follow the guide to build the item number for the reamer head that you need.

The 5000 series reamers use a twist lock on reamer head, so the screw is included with the head assembly.

1

Select Your Head

2

Select Your Mandrel

Replaceable Heads

Expandable | 5000 Series

Build Your Part No.

1 Series

5400 Series *Radial Coolant*	5401 Series *Central Coolant*	5600 Series *Central Coolant*	5700 Series *Radial Coolant*

2 Flute Style

Your flute style is based on your series selection (above).

Straight Flute

Helical Flute (Right-Hand)

Helical Flute (Left-Hand)

3 Carbide Grade and Coating Codes

These are the combinations of grades and coatings you can choose from.

	Uncoated	TiN	TiCN	TiAlN	Alcrona	Hardcut	R Coating	T Coating
Carbide	KL	KN	KC	KA	KK	KH	KR	KT
Cermet	SV	SN	SC	SA	SK	SH	SR	ST

4 Lead-in Recommendations

	T	F	N	G	L	A	V	K
P			●	●		◐	○	◐
S	●			◐				
M			◐	●				◐
H			◐	●				
K				◐			●	◐
N				●			◐	

	E	M	K
P	●		◐
S	●	◐	
M	●		◐
H	◐	●	
K	◐	●	◐
N	●	◐	

	E	M
P	●	
S	●	◐
M	●	
H	◐	●
K	◐	●
N	●	◐

5 Optional Add-ons

Add-on	Indicator	Description
Half Circular Face	H	Provides improved tool life in materials over 25 Rc.
Double Back Taper	Z	Provides improved tool life in materials over 25 Rc but should not be used in applications requiring less than a 32 Ra surface finish.

6 Diameter

For the diameter portion of the item number, refer to the following tables:

Imperial (in) D_1 Range	Imperial (in) Tolerance (min/max)	Metric (mm) D_1 Range	Metric (mm) Tolerance (min/max)
0.3780 - 0.4570	-0.0002 / +0.0002	9.600 - 11.609	-0.005 / +0.005
0.4571 - 0.5751		11.610 - 14.609	
0.5752 - 0.6932		14.610 - 17.609	
0.6933 - 0.8507		17.610 - 21.609	
0.8508 - 1.0475		21.610 - 26.609	
1.0476 - 1.2835		26.610 - 32.600	

● Best ◐ Better ○ Good

Ordering Example:

The customer needs the following:

- Straight fluted 5000 series reamer head
- Central coolant configuration (blind holes)
- Fixed style
- Carbide
- TiN coating
- G lead-in
- Half circular face
- 1.0000" diameter
- -0.0002" / +0.0002" tolerance for 1.0000" diameter

I 5401 – K N G H – 10000 + 0002 – 0002

- Imperial Diameter
- Straight Flute
- Central Coolant
- Carbide
- TiN Coating
- G Lead-in
- Half circular face
- Diameter
- Tolerance

C: 68 - 87

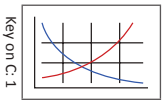

Key on C: 1

C: 26

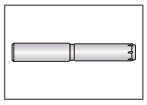

C: 60 - 65

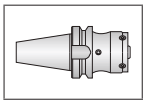

C: 90

A DRILLING
B BORING
C REAMING
D BURNISHING
E THREADING
X SPECIALS

Replaceable Head Mandrels

5000 Series | Diameter Range: 0.3780" - 1.2835" (9.600 mm - 32.600 mm)

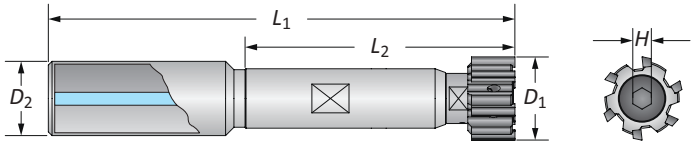

Cylindrical Shank | Short

D_1 Range		Mandrel			H (mm)	No. of Teeth	Part No.	Wrench
Imperial (in)	Metric (mm)	L_2 (mm)	L_1 (mm)	D_2 (mm)				
0.3780 - 0.4570	9.600 - 11.609	50.00	95.00	12.00	3	6	**5000-MC-001**	5000-CH-007
0.4571 - 0.5751	11.610 - 14.609	50.00	95.0	12.00	3.5	6	**5000-MC-002**	5000-CH-008
0.5752 - 0.6932	14.610 - 17.609	65.00	113.00	16.00	4	6	**5000-MC-003**	5000-CH-010
0.6933 - 0.8507	17.610 - 21.609	75.00	125.00	20.00	5	6	**5000-MC-004**	5000-CH-012
0.8508 - 1.0475	21.610 - 26.609	85.00	135.00	20.00	6	6	**5000-MC-005**	5000-CH-015
1.0476 - 1.2835	26.610 - 32.600	105.00	161.00	25.00	8	6	**5000-MC-006**	5000-CH-019

Cylindrical Shank | Long

D_1 Range		Mandrel			H (mm)	No. of Teeth	Part No.	Wrench
Imperial (in)	Metric (mm)	L_2 (mm)	L_1 (mm)	D_2 (mm)				
0.3780 - 0.4570	9.600 - 11.609	95.00	140.00	12.00	3	6	**5000-ML-001**	5000-CH-007
0.4571 - 0.5751	11.610 - 14.609	95.00	140.00	12.00	3.5	6	**5000-ML-002**	5000-CH-008
0.5752 - 0.6932	14.610 - 17.609	105.00	153.00	16.00	4	6	**5000-ML-003**	5000-CH-010
0.6933 - 0.8507	17.610 - 21.609	125.00	175.00	20.00	5	6	**5000-ML-004**	5000-CH-012
0.8508 - 1.0475	21.610 - 26.609	145.00	195.00	20.00	6	6	**5000-ML-005**	5000-CH-015
1.0476 - 1.2835	26.610 - 32.600	165.00	221.00	25.00	8	6	**5000-ML-006**	5000-CH-019

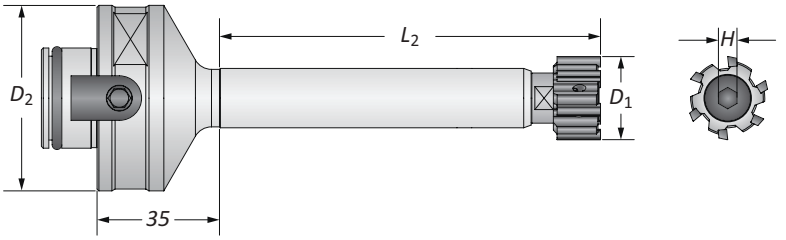

Modular Shank | Standard

D_1 Range		Mandrel	H (mm)	No. of Teeth	Part No.	Wrench
Imperial (in)	Metric (mm)	L_2 (mm)				
0.3780 - 0.4570	9.600 - 11.609	65.00	3	6	**5000-MM-001**	5000-CH-007
0.4571 - 0.5751	11.610 - 14.609	65.00	3.5	6	**5000-MM-002**	5000-CH-008
0.5752 - 0.6932	14.610 - 17.609	80.00	4	6	**5000-MM-003**	5000-CH-010
0.6933 - 0.8507	17.610 - 21.609	100.00	5	6	**5000-MM-004**	5000-CH-012
0.8508 - 1.0475	21.610 - 26.609	110.00	6	6	**5000-MM-005**	5000-CH-015
1.0476 - 1.2835	26.610 - 32.600	120.00	8	6	**5000-MM-006**	5000-CH-019

C: 68 - 87

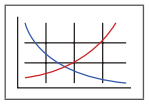

Key on C: 1

C: 25

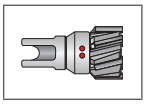

C: 60 - 65

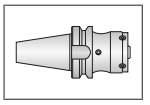

C: 90

Notes

Monobloc Style Reamers

Product Overview

Monobloc Reamer Features
• Diameter range: 0.2283" - 1.2638" (5.800 mm - 32.100 mm).
• Available with straight or left-hand helical flutes.
• Expands to accommodate for wear.
• Available with cylindrical shanks only.
• Workday lead time 15 - 25 days (quantity dependent).
• Available for recondition.

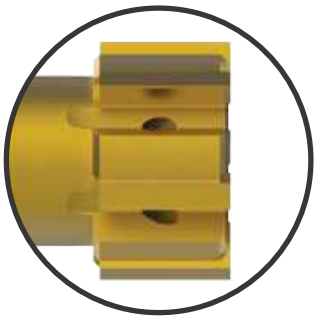

Straight Flute

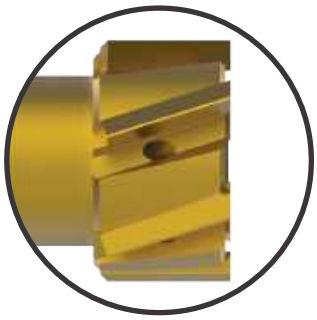

Left-Hand Helical Flute

Uncoated | TiN Coated | TiAlN Coated | TiCN Coated | Alcrona Coated | Hardcut Coated | R Coated | T Coated

Straight Flute - Through or Blind Holes

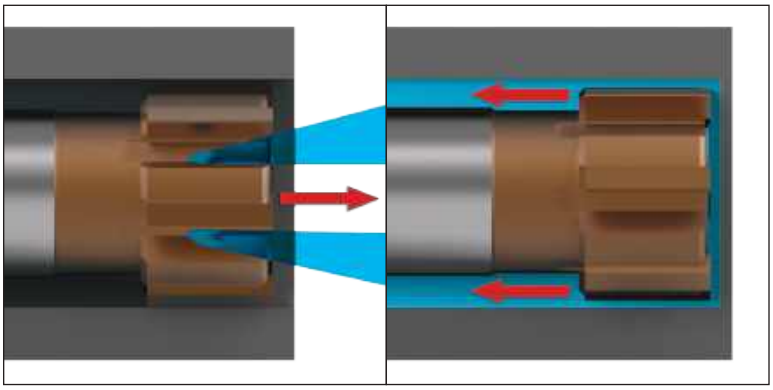

Use for either through hole or blind hole applications. The coolant flow determines the direction of the chip evacuation.

Left-Hand Helical Flute - Through Holes Only

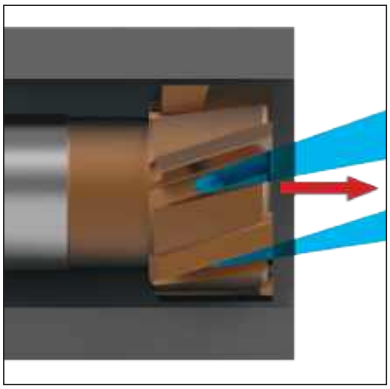

Use when reaming through hole applications. The cutting action of the helical flutes forces the chips forward for evacuation.

Product Nomenclature

Monobloc Style Reamers

I	9	3627	–	KL	E	–	006250	+	0000	–	0005
1	2	3		4	5		6		7		

NOTE: If diameter and tolerance are specified in inch units, put an "**I**" at the beginning of the item number.

1. Diameter Unit of Measure

Blank = Metric diameter (mm)

I = Imperial diameter (in)

2. Shank Measure

Blank = Metric

9 = Inch

3. Series

2441 = Short length, straight flute - central coolant (blind holes)

3620 = Short length, straight flute - radial coolant (through holes)

3627 = Short length, helical flute - radial coolant (through holes)

2431 = Long length, straight flute - central coolant (blind holes)

3610 = Long length, straight flute - radial coolant (through holes)

3617 = Long length, helical flute - radial coolant (through holes)

4. Substrate and Coating

KL = Uncoated carbide
KN = TiN coated carbide
KC = TiCN coated carbide
KA = TiAlN coated carbide
KK = Alcrona coated carbide
KH = Hardcut coated carbide
KR = R coated carbide
KT = T coated carbide

SV = Uncoated cermet
SN = TiN coated cermet
SC = TiCN coated cermet
SA = TiAlN coated cermet
SK = Alcrona coated cermet
SH = Hardcut coated cermet
SR = R coated cermet
ST = T coated cermet

5. Lead-in

E, M = Left-hand helical flute

A, F, G, L, N, T, V, K = Straight flute

K = Chipbreaker geometry for straight or helical flute

6. Diameter

XX.XXXX = Imperial (inch)

XXX.XXX = Metric (mm)

7. Tolerance*

4 decimal places = inch tolerance

3 decimal places = mm tolerance

*The total tolerance capable is 0.0002" (0.005 mm)

Reference Key

Symbol	Attribute
D_1	Reamer diameter
D_2	Shank diameter
L_1	Overall length
L_2	Body length
L_{15}	Cutting edge length
H	Hex key

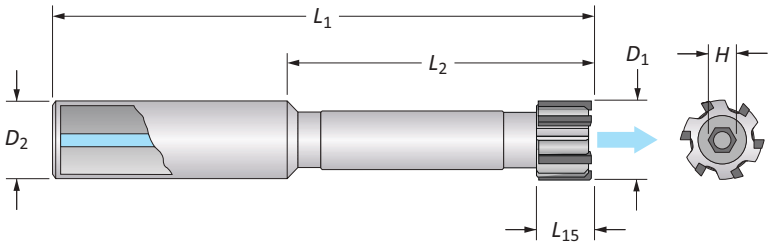

Monobloc Reamers

2441 Series | Short Length | Diameter Range: 0.2283" - 1.2638" (5.800 mm - 32.100 mm)

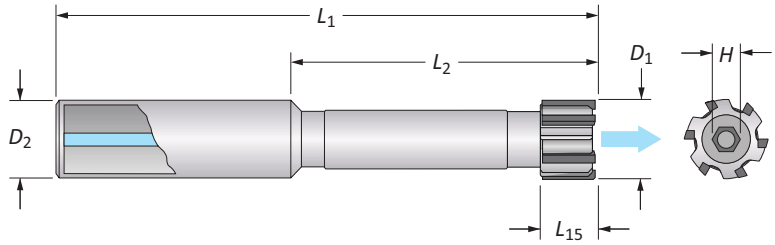

Series	2441	Flute	Straight	Application	Blind Holes	Coolant	Central

Inch Shank Part No. 92441-XXX-D_1+XXXX-XXXX					Metric Shank Part No. 2441-XXX-D_1+XXXX-XXXX						
D_1 Range	L_{15}	L_2	L_1	D_2	D_1 Range	L_{15}	L_2	L_1	D_2	No. of Teeth	H (mm)
0.2283 - 0.2602	0.315	1.575	3.071	0.500	5.800 - 6.609	8	40	80	12	4	1.5
0.2603 - 0.2996	0.315	1.575	3.071	0.500	6.610 - 7.609	8	40	80	12	4	2
0.2997 - 0.3389	0.394	1.575	3.071	0.500	7.610 - 8.609	10	40	80	12	4	2.5
0.3390 - 0.3783	0.394	1.969	3.465	0.500	8.610 - 9.609	10	50	90	12	4	2.5
0.3784 - 0.4177	0.394	1.969	3.740	0.500	9.610 - 10.609	10	50	95	12	6	3
0.4178 - 0.4570	0.394	1.969	3.740	0.500	10.610 - 11.609	10	60	105	12	6	3
0.4571 - 0.4964	0.394	1.969	3.740	0.500	11.610 - 12.609	10	60	105	12	6	3
0.4965 - 0.5358	0.394	1.969	3.740	0.500	12.610 - 13.609	10	60	105	12	6	4
0.5359 - 0.5752	0.394	1.969	3.740	0.500	13.610 - 14.609	10	70	115	12	6	4
0.5753 - 0.6145	0.394	1.969	3.740	0.500	14.610 - 15.609	10	70	115	12	6	4
0.6146 - 0.6539	0.394	1.969	3.937	0.625	15.610 - 16.609	10	80	130	16	6	4
0.6540 - 0.6933	0.394	1.969	3.937	0.625	16.610 - 17.609	10	80	130	16	6	5
0.6934 - 0.7326	0.472	1.969	3.937	0.625	17.610 - 18.609	12	90	140	16	6	5
0.7327 - 0.7523	0.472	2.362	4.724	0.750	18.610 - 19.109	12	90	150	20	6	5
0.7524 - 0.7917	0.472	2.362	4.724	0.750	19.110 - 20.109	12	100	160	20	6	5
0.7918 - 0.8311	0.472	2.362	4.724	0.750	20.110 - 21.109	12	100	160	20	6	5
0.8312 - 0.8704	0.472	2.362	4.724	0.750	21.110 - 22.109	12	100	160	20	6	6
0.8705 - 0.9098	0.472	2.362	4.724	0.750	22.110 - 23.109	12	100	160	20	6	6
0.9099 - 0.9492	0.472	2.362	4.724	0.750	23.110 - 24.109	12	100	160	20	6	6
0.9493 - 0.9885	0.472	2.362	4.724	0.750	24.110 - 25.109	12	100	160	20	6	6
0.9886 - 1.0279	0.472	2.953	5.315	1.000	25.110 - 26.109	16	110	170	25	6	6
1.0280 - 1.0673	0.551	2.953	5.315	1.000	26.110 - 27.109	16	110	170	25	6	6
1.0674 - 1.1067	0.551	2.953	5.315	1.000	27.110 - 28.109	16	110	170	25	6	8
1.1068 - 1.1460	0.551	2.953	5.315	1.000	28.110 - 29.109	16	110	170	25	6	8
1.1461 - 1.1854	0.551	2.953	5.315	1.000	29.110 - 30.109	16	110	170	25	6	8
1.1855 - 1.2248	0.551	2.953	5.315	1.000	30.110 - 31.109	16	110	170	25	6	8
1.2249 - 1.2638	0.551	2.953	5.315	1.000	31.110 - 32.100	16	110	170	25	6	8

Coating and Substrate Code (Part No. 2441-XXX-D_1+XXXX-XXXX)

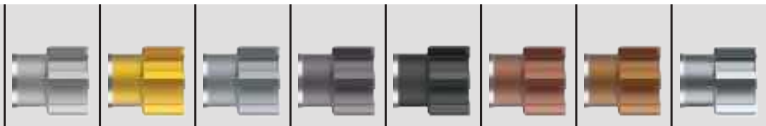

Grade	Uncoated	TiN	TiCN	TiAlN	Alcrona	Hardcut	R Coating	T Coating
Carbide	KL	KN	KC	KA	KK	KH	KR	KT
Cermet	SV	SN	SC	SA	SK	SH	SR	ST

Lead-in (Part No. 2441-XXX-D_1+XXXX-XXXX)

ISO Material	T	F	N	G	L	A	V	K
P			●	●		◐	○	◐
S	●			◐				
M			◐	●				◐
H			◐	●				
K				◐			●	◐
N				●			◐	

● Best ◐ Better ○ Good

Ordering Example

The customer needs:

- Metric shank
- Carbide
- TiN coating
- F lead-in
- 30.60 mm diameter
- Blind hole
- ±0.005 mm tolerance

2441 – KN F – 030600 + 005 – 005

- 2441 – 2441 Series - Metric Shank
- KN – Carbide
- F – TiN Coating
- F – F Lead-in
- 030600 – Diameter
- 005 – 005 – Tolerance

C: 68 - 87

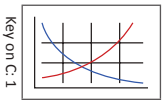

C: 60 - 65

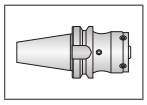

C: 91

Monobloc Reamers

3620 Series | Short Length | Diameter Range: 0.2283" - 1.2638" (5.800 mm - 32.100 mm)

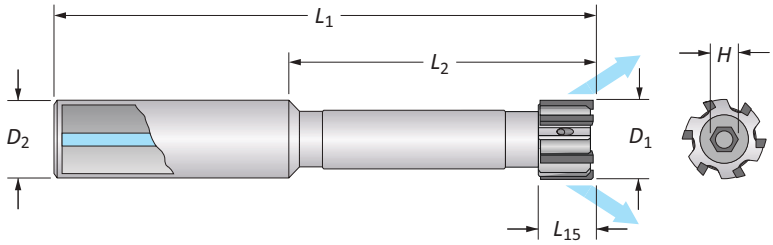

Series	3620	Flute	Straight	Application	Through Holes	Coolant	Radial

Inch Shank Part No. 93620-XXX-D_1+XXXX-XXXX					Metric Shank Part No. 3620-XXX-D_1+XXXX-XXXX						
D_1 Range	L_{15}	L_2	L_1	D_2	D_1 Range	L_{15}	L_2	L_1	D_2	No. of Teeth	H (mm)
0.2283 - 0.2602	0.315	1.575	3.071	0.500	5.800 - 6.609	8	40	78	12	4	1.5
0.2603 - 0.2996	0.315	1.575	3.071	0.500	6.610 - 7.609	8	40	78	12	4	2
0.2997 - 0.3389	0.394	1.575	3.071	0.500	7.610 - 8.609	10	40	78	12	4	2.5
0.3390 - 0.3783	0.394	1.969	3.465	0.500	8.610 - 9.609	10	50	88	12	4	2.5
0.3784 - 0.4177	0.394	1.969	3.740	0.500	9.610 - 10.609	10	50	95	12	6	3
0.4178 - 0.4570	0.394	1.969	3.740	0.500	10.610 - 11.609	10	50	95	12	6	3
0.4571 - 0.4964	0.394	1.969	3.740	0.500	11.610 - 12.609	10	50	95	12	6	3
0.4965 - 0.5358	0.394	1.969	3.740	0.500	12.610 - 13.609	10	50	95	12	6	4
0.5359 - 0.5752	0.394	1.969	3.740	0.500	13.610 - 14.609	10	50	95	12	6	4
0.5753 - 0.6145	0.394	1.969	3.740	0.500	14.610 - 15.609	10	50	95	12	6	4
0.6146 - 0.6539	0.394	1.969	3.937	0.625	15.610 - 16.609	10	50	100	16	6	4
0.6540 - 0.6933	0.394	1.969	3.937	0.625	16.610 - 17.609	10	50	100	16	6	5
0.6934 - 0.7326	0.472	1.969	3.937	0.625	17.610 - 18.609	12	50	100	16	6	5
0.7327 - 0.7523	0.472	2.362	4.724	0.750	18.610 - 19.109	12	60	120	20	6	5
0.7524 - 0.7917	0.472	2.362	4.724	0.750	19.110 - 20.109	12	60	120	20	6	5
0.7918 - 0.8311	0.472	2.362	4.724	0.750	20.110 - 21.109	12	60	120	20	6	5
0.8312 - 0.8704	0.472	2.362	4.724	0.750	21.110 - 22.109	12	60	120	20	6	6
0.8705 - 0.9098	0.472	2.362	4.724	0.750	22.110 - 23.109	12	60	120	20	6	6
0.9099 - 0.9492	0.472	2.362	4.724	0.750	23.110 - 24.109	12	60	120	20	6	6
0.9493 - 0.9885	0.472	2.362	4.724	0.750	24.110 - 25.109	12	60	120	20	6	6
0.9886 - 1.0279	0.472	2.953	5.315	1.000	25.110 - 26.109	16	70	135	25	6	6
1.0280 - 1.0673	0.551	2.953	5.315	1.000	26.110 - 27.109	16	70	135	25	6	6
1.0674 - 1.1067	0.551	2.953	5.315	1.000	27.110 - 28.109	16	70	135	25	6	8
1.1068 - 1.1460	0.551	2.953	5.315	1.000	28.110 - 29.109	16	70	135	25	6	8
1.1461 - 1.1854	0.551	2.953	5.315	1.000	29.110 - 30.109	16	70	135	25	6	8
1.1855 - 1.2248	0.551	2.953	5.315	1.000	30.110 - 31.109	16	70	135	25	6	8
1.2249 - 1.2638	0.551	2.953	5.315	1.000	31.110 - 32.100	16	70	135	25	6	8

Coating and Substrate Code (Part No. 3620-XXX-D_1+XXXX-XXXX)

Grade	Uncoated	TiN	TiCN	TiAlN	Alcrona	Hardcut	R Coating	T Coating
Carbide	KL	KN	KC	KA	KK	KH	KR	KT
Cermet	SV	SN	SC	SA	SK	SH	SR	ST

Lead-in (Part No. 3620-XXX-D_1+XXXX-XXXX)

ISO Material	T	F	N	G	L	A	V	K
P			●	●		◐	○	◐
S	●			◐				
M			◐	●				◐
H			◐	●				
K				◐			●	◐
N				●			◐	

● Best ◐ Better ○ Good

Ordering Example

The customer needs:

- Metric shank
- Carbide
- TiN coating
- F lead-in
- 30.60 mm diameter
- Through hole
- ±0.005 mm tolerance

3620 – KN F – 030600 + 005 – 005

- 3620 – 3620 Series - Metric Shank
- KN – Carbide
- F – TiN Coating
- F – F Lead-in
- 030600 – Diameter
- 005 – 005 – Tolerance

C: 68 - 87

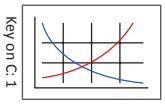

Key on C: 1

C: 60 - 65

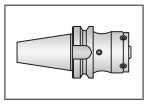

C: 91

Monobloc Reamers

3627 Series | Short Length | Diameter Range: 0.2283" - 1.2638" (5.800 mm - 32.100 mm)

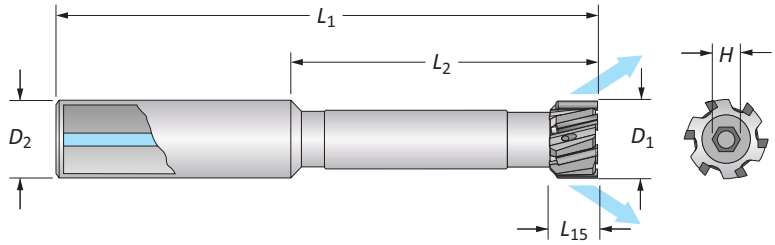

Series	3627	Flute	Helical	Application	Through Holes	Coolant	Radial

Inch Shank Part No. 93627-XXX-D_1+XXXX-XXXX					Metric Shank Part No. 3627-XXX-D_1+XXXX-XXXX						
D_1 Range	L_{15}	L_2	L_1	D_2	D_1 Range	L_{15}	L_2	L_1	D_2	No. of Teeth	H (mm)
0.2283 - 0.2602	0.315	1.575	3.150	0.500	5.800 - 6.609	8	40	80	12	4	1.5
0.2603 - 0.2996	0.315	1.575	3.150	0.500	6.610 - 7.609	8	40	80	12	4	2
0.2997 - 0.3389	0.394	1.575	3.150	0.500	7.610 - 8.609	10	40	80	12	4	2.5
0.3390 - 0.3783	0.394	1.969	3.543	0.500	8.610 - 9.609	10	50	90	12	4	2.5
0.3784 - 0.4177	0.394	1.969	3.740	0.500	9.610 - 10.609	10	50	95	12	6	3
0.4178 - 0.4570	0.394	2.362	4.134	0.500	10.610 - 11.609	10	60	105	12	6	3
0.4571 - 0.4964	0.394	2.362	4.134	0.500	11.610 - 12.609	10	60	105	12	6	3
0.4965 - 0.5358	0.394	2.362	4.134	0.500	12.610 - 13.609	10	60	105	12	6	4
0.5359 - 0.5752	0.394	2.756	4.528	0.500	13.610 - 14.609	10	70	115	12	6	4
0.5753 - 0.6145	0.394	2.756	4.528	0.500	14.610 - 15.609	10	70	115	12	6	4
0.6146 - 0.6539	0.394	3.150	5.118	0.625	15.610 - 16.609	10	80	130	16	6	4
0.6540 - 0.6933	0.394	3.150	5.118	0.625	16.610 - 17.609	10	80	130	16	6	5
0.6934 - 0.7326	0.472	3.543	5.512	0.625	17.610 - 18.609	12	90	140	16	6	5
0.7327 - 0.7523	0.472	3.543	5.906	0.750	18.610 - 19.109	12	90	150	20	6	5
0.7524 - 0.7917	0.472	3.937	6.299	0.750	19.110 - 20.109	12	100	160	20	6	5
0.7918 - 0.8311	0.472	3.937	6.299	0.750	20.110 - 21.109	12	100	160	20	6	5
0.8312 - 0.8704	0.472	3.937	6.299	0.750	21.110 - 22.109	12	100	160	20	6	6
0.8705 - 0.9098	0.472	3.937	6.299	0.750	22.110 - 23.109	12	100	160	20	6	6
0.9099 - 0.9492	0.472	3.937	6.299	0.750	23.110 - 24.109	12	100	160	20	6	6
0.9493 - 0.9885	0.472	3.937	6.299	0.750	24.110 - 25.109	12	100	160	20	6	6
0.9886 - 1.0279	0.472	4.331	6.693	1.000	25.110 - 26.109	16	110	170	25	6	6
1.0280 - 1.0673	0.551	4.331	6.693	1.000	26.110 - 27.109	16	110	170	25	6	6
1.0674 - 1.1067	0.551	4.331	6.693	1.000	27.110 - 28.109	16	110	170	25	6	8
1.1068 - 1.1460	0.551	4.331	6.693	1.000	28.110 - 29.109	16	110	170	25	6	8
1.1461 - 1.1854	0.551	4.331	6.693	1.000	29.110 - 30.109	16	110	170	25	6	8
1.1855 - 1.2248	0.551	4.331	6.693	1.000	30.110 - 31.109	16	110	170	25	6	8
1.2249 - 1.2638	0.551	4.331	6.693	1.000	31.110 - 32.100	16	110	170	25	6	8

Coating and Substrate Code (Part No. 3627-XXX-D_1+XXXX-XXXX)

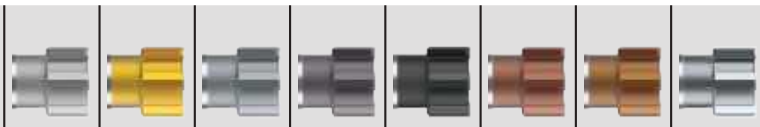

Grade	Uncoated	TiN	TiCN	TiAlN	Alcrona	Hardcut	R Coating	T Coating
Carbide	KL	KN	KC	KA	KK	KH	KR	KT
Cermet	SV	SN	SC	SA	SK	SH	SR	ST

Lead-in (Part No. 3627-XXX-D_1+XXXX-XXXX)

ISO Material	E	M
P	●	
S	●	◐
M	●	
H	◐	●
K	◐	●
N	●	◐

● Best ◐ Better ○ Good

Ordering Example:
The customer needs:
- Metric shank
- Carbide
- TiN coating
- F lead-in
- 30.60 mm diameter
- Through hole
- ±0.005 mm tolerance

3627 – KN F – 030600 + 005 – 005

3627 Series - Metric Shank
Carbide
TiN Coating
F Lead-in
Diameter
Tolerance

C: 68 - 87

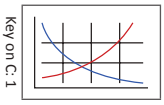

C: 60 - 65

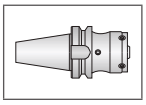

C: 91

Monobloc Reamers

2431 Series | Long Length | Diameter Range: 0.2283" - 1.2638" (5.800 mm - 32.100 mm)

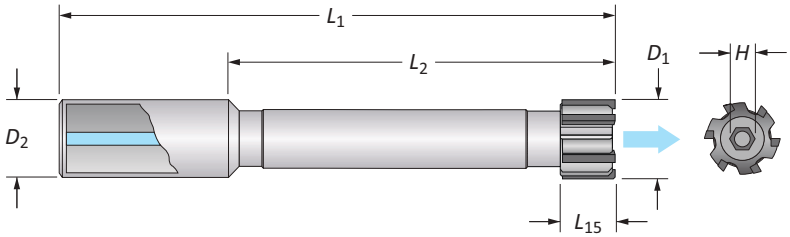

Series	2431	Flute	Straight	Application	Blind Holes	Coolant	Central

Inch Shank Part No. 92431-XXX-D_1+XXXX-XXXX					Metric Shank Part No. 2431-XXX-D_1+XXXX-XXXX						
D_1 Range	L_{15}	L_2	L_1	D_2	D_1 Range	L_{15}	L_2	L_1	D_2	No. of Teeth	H (mm)
0.2283 - 0.2602	0.315	3.346	4.843	0.500	5.800 - 6.609	8	85	123	12	4	1.5
0.2603 - 0.2996	0.315	3.346	4.843	0.500	6.610 - 7.609	8	85	123	12	4	2
0.2997 - 0.3389	0.394	3.346	4.843	0.500	7.610 - 8.609	10	85	123	12	4	2.5
0.3390 - 0.3783	0.394	3.346	4.843	0.500	8.610 - 9.609	10	85	123	12	4	2.5
0.3784 - 0.4177	0.394	4.528	6.299	0.500	9.610 - 10.609	10	115	160	12	6	3
0.4178 - 0.4570	0.394	4.528	6.299	0.500	10.610 - 11.609	10	115	160	12	6	3
0.4571 - 0.4964	0.394	4.528	6.299	0.500	11.610 - 12.609	10	115	160	12	6	3
0.4965 - 0.5358	0.394	4.528	6.299	0.500	12.610 - 13.609	10	115	160	12	6	4
0.5359 - 0.5752	0.394	4.528	6.299	0.500	13.610 - 14.609	10	115	160	12	6	4
0.5753 - 0.6145	0.394	4.528	6.299	0.500	14.610 - 15.609	10	115	160	12	6	4
0.6146 - 0.6539	0.394	5.118	7.087	0.625	15.610 - 16.609	10	130	180	16	6	4
0.6540 - 0.6933	0.394	5.118	7.087	0.625	16.610 - 17.609	10	130	180	16	6	5
0.6934 - 0.7326	0.472	5.118	7.087	0.625	17.610 - 18.609	12	130	180	16	6	5
0.7327 - 0.7523	0.472	5.512	7.874	0.750	18.610 - 19.109	12	140	200	20	6	5
0.7524 - 0.7917	0.472	5.512	7.874	0.750	19.110 - 20.109	12	140	200	20	6	5
0.7918 - 0.8311	0.472	5.512	7.874	0.750	20.110 - 21.109	12	140	200	20	6	5
0.8312 - 0.8704	0.472	5.512	7.874	0.750	21.110 - 22.109	12	140	200	20	6	6
0.8705 - 0.9098	0.472	5.512	7.874	0.750	22.110 - 23.109	12	140	200	20	6	6
0.9099 - 0.9492	0.472	5.512	7.874	0.750	23.110 - 24.109	12	140	200	20	6	6
0.9493 - 0.9885	0.472	5.512	7.874	0.750	24.110 - 25.109	12	140	200	20	6	6
0.9886 - 1.0279	0.472	5.906	8.268	1.000	25.110 - 26.109	16	150	210	25	6	6
1.0280 - 1.0673	0.551	5.906	8.268	1.000	26.110 - 27.109	16	150	210	25	6	6
1.0674 - 1.1067	0.551	5.906	8.268	1.000	27.110 - 28.109	16	150	210	25	6	8
1.1068 - 1.1460	0.551	5.906	8.268	1.000	28.110 - 29.109	16	150	210	25	6	8
1.1461 - 1.1854	0.551	5.906	8.268	1.000	29.110 - 30.109	16	150	210	25	6	8
1.1855 - 1.2248	0.551	5.906	8.268	1.000	30.110 - 31.109	16	150	210	25	6	8
1.2249 - 1.2638	0.551	5.906	8.268	1.000	31.110 - 32.100	16	150	210	25	6	8

Coating and Substrate Code (Part No. 2431-XXX-D_1+XXXX-XXXX)

Grade	Uncoated	TiN	TiCN	TiAlN	Alcrona	Hardcut	R Coating	T Coating
Carbide	KL	KN	KC	KA	KK	KH	KR	KT
Cermet	SV	SN	SC	SA	SK	SH	SR	ST

Lead-in (Part No. 2431-XXX-D_1+XXXX-XXXX)

ISO Material	T	F	N	G	L	A	V	K
P			●	●		◐	○	◐
S	●			◐				
M			◐	●				◐
H			◐	●				
K				◐			●	◐
N				●			◐	

● Best ◐ Better ○ Good

Ordering Example

The customer needs:

- Metric shank
- Carbide
- TiN coating
- F lead-in
- 30.60 mm diameter
- Blind hole
- ±0.005 mm tolerance

2431 – KN F – 030600 + 005 – 005

- 2431 – 2431 Series - Metric Shank
- KN – Carbide
- F – TiN Coating
- F – F Lead-in
- 030600 – Diameter
- 005 – Tolerance

C: 68 - 87 C: 60 - 65 C: 91

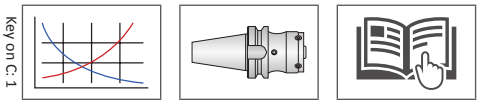

Key on C: 1

Monobloc Reamers

3610 Series | Long Length | Diameter Range: 0.2283" - 1.2638" (5.800 mm - 32.100 mm)

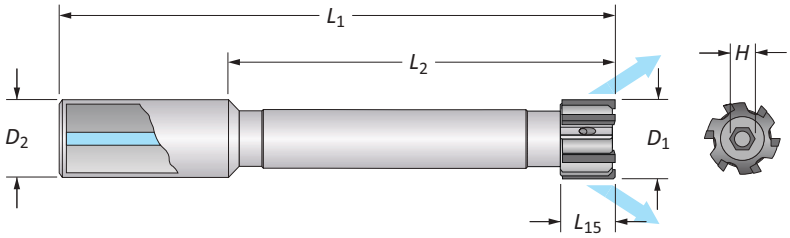

Series	3610	Flute	Straight	Application	Through Holes	Coolant	Radial

Inch Shank Part No. 93610-XXX-D_1+XXXX-XXXX					Metric Shank Part No. 3610-XXX-D_1+XXXX-XXXX						
D_1 Range	L_{15}	L_2	L_1	D_2	D_1 Range	L_{15}	L_2	L_1	D_2	No. of Teeth	H (mm)
0.2283 - 0.2602	0.315	3.346	4.843	0.500	5.800 - 6.609	8	85	123	12	4	1.5
0.2603 - 0.2996	0.315	3.346	4.843	0.500	6.610 - 7.609	8	85	123	12	4	2
0.2997 - 0.3389	0.394	3.346	4.843	0.500	7.610 - 8.609	10	85	123	12	4	2.5
0.3390 - 0.3783	0.394	3.346	4.843	0.500	8.610 - 9.609	10	85	123	12	4	2.5
0.3784 - 0.4177	0.394	4.528	6.299	0.500	9.610 - 10.609	10	115	160	12	6	3
0.4178 - 0.4570	0.394	4.528	6.299	0.500	10.610 - 11.609	10	115	160	12	6	3
0.4571 - 0.4964	0.394	4.528	6.299	0.500	11.610 - 12.609	10	115	160	12	6	3
0.4965 - 0.5358	0.394	4.528	6.299	0.500	12.610 - 13.609	10	115	160	12	6	4
0.5359 - 0.5752	0.394	4.528	6.299	0.500	13.610 - 14.609	10	115	160	12	6	4
0.5753 - 0.6145	0.394	4.528	6.299	0.500	14.610 - 15.609	10	115	160	12	6	4
0.6146 - 0.6539	0.394	5.118	7.087	0.625	15.610 - 16.609	10	130	180	16	6	4
0.6540 - 0.6933	0.394	5.118	7.087	0.625	16.610 - 17.609	10	130	180	16	6	5
0.6934 - 0.7326	0.472	5.118	7.087	0.625	17.610 - 18.609	12	130	180	16	6	5
0.7327 - 0.7523	0.472	5.512	7.874	0.750	18.610 - 19.109	12	140	200	20	6	5
0.7524 - 0.7917	0.472	5.512	7.874	0.750	19.110 - 20.109	12	140	200	20	6	5
0.7918 - 0.8311	0.472	5.512	7.874	0.750	20.110 - 21.109	12	140	200	20	6	5
0.8312 - 0.8704	0.472	5.512	7.874	0.750	21.110 - 22.109	12	140	200	20	6	6
0.8705 - 0.9098	0.472	5.512	7.874	0.750	22.110 - 23.109	12	140	200	20	6	6
0.9099 - 0.9492	0.472	5.512	7.874	0.750	23.110 - 24.109	12	140	200	20	6	6
0.9493 - 0.9885	0.472	5.512	7.874	0.750	24.110 - 25.109	12	140	200	20	6	6
0.9886 - 1.0279	0.472	5.906	8.268	1.000	25.110 - 26.109	16	150	210	25	6	6
1.0280 - 1.0673	0.551	5.906	8.268	1.000	26.110 - 27.109	16	150	210	25	6	6
1.0674 - 1.1067	0.551	5.906	8.268	1.000	27.110 - 28.109	16	150	210	25	6	8
1.1068 - 1.1460	0.551	5.906	8.268	1.000	28.110 - 29.109	16	150	210	25	6	8
1.1461 - 1.1854	0.551	5.906	8.268	1.000	29.110 - 30.109	16	150	210	25	6	8
1.1855 - 1.2248	0.551	5.906	8.268	1.000	30.110 - 31.109	16	150	210	25	6	8
1.2249 - 1.2638	0.551	5.906	8.268	1.000	31.110 - 32.100	16	150	210	25	6	8

Coating and Substrate Code (Part No. 3610-XXX-D_1+XXXX-XXXX)

Grade	Uncoated	TiN	TiCN	TiAlN	Alcrona	Hardcut	R Coating	T Coating
Carbide	KL	KN	KC	KA	KK	KH	KR	KT
Cermet	SV	SN	SC	SA	SK	SH	SR	ST

Lead-in (Part No. 3610-XXX-D_1+XXXX-XXXX)

ISO Material	T	F	N	G	L	A	V	K
P			●	●		◐	○	◐
S	●			◐				
M			◐	●				◐
H			◐	●				
K				◐			●	◐
N				●			◐	

● Best ◐ Better ○ Good

Ordering Example

The customer needs:

- Metric shank
- Carbide
- TiN coating
- F lead-in
- 30.60 mm diameter
- Through hole
- ±0.005 mm tolerance

3610 – KN F – 030600 + 005 – 005

- 3610 – 3610 Series - Metric Shank
- KN – Carbide
- F – TiN Coating
- F – F Lead-in
- 030600 – Diameter
- 005 – 005 – Tolerance

C: 68 - 87

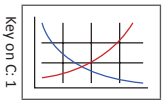

C: 60 - 65

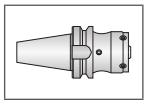

C: 91

Monobloc Reamers

3617 Series | Long Length | Diameter Range: 0.2283" - 1.2638" (5.800 mm - 32.100 mm)

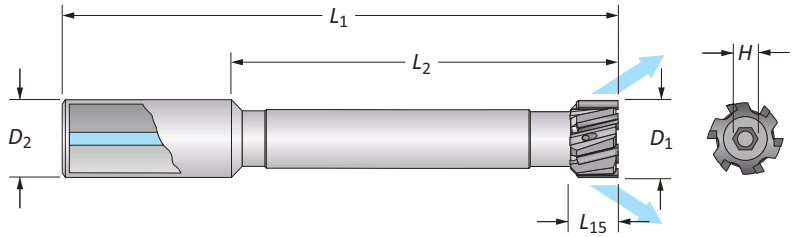

Series	3617	Flute	Helical	Application	Through Holes	Coolant	Radial

Inch Shank Part No. 93617-XXX-D_1+XXXX-XXXX					Metric Shank Part No. 3617-XXX-D_1+XXXX-XXXX						
D_1 Range	L_{15}	L_2	L_1	D_2	D_1 Range	L_{15}	L_2	L_1	D_2	No. of Teeth	H (mm)
0.2283 - 0.2602	0.315	3.346	4.843	0.500	5.800 - 6.609	8	85	123	12	4	1.5
0.2603 - 0.2996	0.315	3.346	4.843	0.500	6.610 - 7.609	8	85	123	12	4	2
0.2997 - 0.3389	0.394	3.346	4.843	0.500	7.610 - 8.609	10	85	123	12	4	2.5
0.3390 - 0.3783	0.394	3.346	4.843	0.500	8.610 - 9.609	10	85	123	12	4	2.5
0.3784 - 0.4177	0.394	4.528	6.299	0.500	9.610 - 10.609	10	115	160	12	6	3
0.4178 - 0.4570	0.394	4.528	6.299	0.500	10.610 - 11.609	10	115	160	12	6	3
0.4571 - 0.4964	0.394	4.528	6.299	0.500	11.610 - 12.609	10	115	160	12	6	3
0.4965 - 0.5358	0.394	4.528	6.299	0.500	12.610 - 13.609	10	115	160	12	6	4
0.5359 - 0.5752	0.394	4.528	6.299	0.500	13.610 - 14.609	10	115	160	12	6	4
0.5753 - 0.6145	0.394	4.528	6.299	0.500	14.610 - 15.609	10	115	160	12	6	4
0.6146 - 0.6539	0.394	5.118	7.087	0.625	15.610 - 16.609	10	130	180	16	6	4
0.6540 - 0.6933	0.394	5.118	7.087	0.625	16.610 - 17.609	10	130	180	16	6	5
0.6934 - 0.7326	0.472	5.118	7.087	0.625	17.610 - 18.609	12	130	180	16	6	5
0.7327 - 0.7523	0.472	5.512	7.874	0.750	18.610 - 19.109	12	140	200	20	6	5
0.7524 - 0.7917	0.472	5.512	7.874	0.750	19.110 - 20.109	12	140	200	20	6	5
0.7918 - 0.8311	0.472	5.512	7.874	0.750	20.110 - 21.109	12	140	200	20	6	5
0.8312 - 0.8704	0.472	5.512	7.874	0.750	21.110 - 22.109	12	140	200	20	6	6
0.8705 - 0.9098	0.472	5.512	7.874	0.750	22.110 - 23.109	12	140	200	20	6	6
0.9099 - 0.9492	0.472	5.512	7.874	0.750	23.110 - 24.109	12	140	200	20	6	6
0.9493 - 0.9885	0.472	5.512	7.874	0.750	24.110 - 25.109	12	140	200	20	6	6
0.9886 - 1.0279	0.472	5.906	8.268	1.000	25.110 - 26.109	16	150	210	25	6	6
1.0280 - 1.0673	0.551	5.906	8.268	1.000	26.110 - 27.109	16	150	210	25	6	6
1.0674 - 1.1067	0.551	5.906	8.268	1.000	27.110 - 28.109	16	150	210	25	6	8
1.1068 - 1.1460	0.551	5.906	8.268	1.000	28.110 - 29.109	16	150	210	25	6	8
1.1461 - 1.1854	0.551	5.906	8.268	1.000	29.110 - 30.109	16	150	210	25	6	8
1.1855 - 1.2248	0.551	5.906	8.268	1.000	30.110 - 31.109	16	150	210	25	6	8
1.2249 - 1.2638	0.551	5.906	8.268	1.000	31.110 - 32.100	16	150	210	25	6	8

Coating and Substrate Code (Part No. 3617-XXX-D_1+XXXX-XXXX)

Grade	Uncoated	TiN	TiCN	TiAlN	Alcrona	Hardcut	R Coating	T Coating
Carbide	KL	KN	KC	KA	KK	KH	KR	KT
Cermet	SV	SN	SC	SA	SK	SH	SR	ST

Lead-in (Part No. 3617-XXX-D_1+XXXX-XXXX)

ISO Material	E	M
P	●	
S	●	◐
M	●	
H	◐	●
K	◐	●
N	●	◐

● Best ◐ Better ○ Good

Ordering Example

The customer needs:

- Metric shank
- Carbide
- TiN coating
- F lead-in
- 30.60 mm diameter
- Through hole
- ±0.005 mm tolerance

3617 – KN F – 030600 + 005 – 005

- 3617 – 3617 Series - Metric Shank
- KN – Carbide
- F – TiN Coating
- F – F Lead-in
- 030600 – Diameter
- 005 – Tolerance

C: 68 - 87

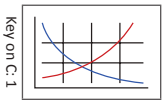

Key on C: 1

C: 60 - 65

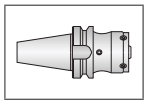

C: 91

Cutting Ring Style Reamers

Product Overview

Cutting Ring Reamer Features
• Diameter range: 0.6929" - 7.8976" (17.600 mm - 200.600 mm). • Available with straight or left-hand helical flutes. • Expands to accommodate for wear. • Mandrels are available for both through holes or blind holes. • Workday lead time 20 - 25 days. • Available for recondition.

Straight Flute

Left-Hand Helical Flute

Uncoated

TiN Coated

TiAlN Coated

TiCN Coated

Alcrona Coated

Hardcut Coated

R Coated

T Coated

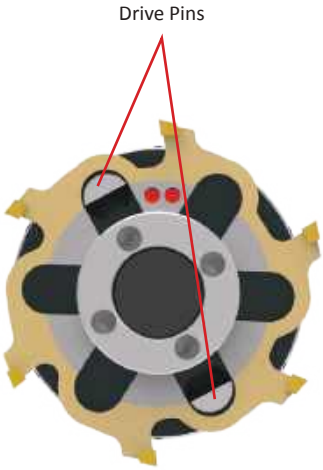

Product Nomenclature

Cutting Rings

I	2ANC-ST	F	–	019686	+	0000	–	0005
1	2	3		4		5		

NOTE: If diameter and tolerance are specified in inch units, put an "**I**" at the beginning of the item number.

1. Diameter Unit of Measure

Blank = Metric diameter (mm)

I = Imperial diameter (in)

2. Coating and Substrate

2000-KT = Uncoated carbide
2TIN-KT = TiN coated carbide
2TIC-KT = TiCN coated carbide
2TIA-KT = TiAlN coated carbide
2TLK-KT = Alcrona coated carbide
2TLH-KT = Hardcut coated carbide
2TLR-KT = R coated carbide
2TLT-KT = T coated carbide

2AVC-ST = Uncoated cermet
2ANC-ST = TiN coated cermet
2ACC-ST = TiCN coated cermet
2AAC-ST = TiAlN coated cermet
2ALK-ST = Alcrona coated cermet
2TLH-ST = Hardcut coated cermet
2TLR-ST = R coated cermet
2TLT-ST = T coated cermet

3. Lead-in

E, M = Left-hand helical flute

A, F, G, L, N, T, V, K = Straight flute

K = Chipbreaker geometry for straight or helical flute

4. Diameter

XX.XXXX = Imperial (inch)

XXX.XXX = Metric (mm)

5. Tolerance

4 decimal places = inch tolerance

3 decimal places = mm tolerance

*The total tolerance capable is 0.0002" (0.005 mm)

Reference Key

Symbol	Attribute
D_1	Reamer diameter
D_2	Shank diameter
D_3	Maximum conical ring diameter
L_1	Overall length
L_2	Length of cut
L_5	Maximum overhang
L_7	Shank length
L_{15}	Flute length

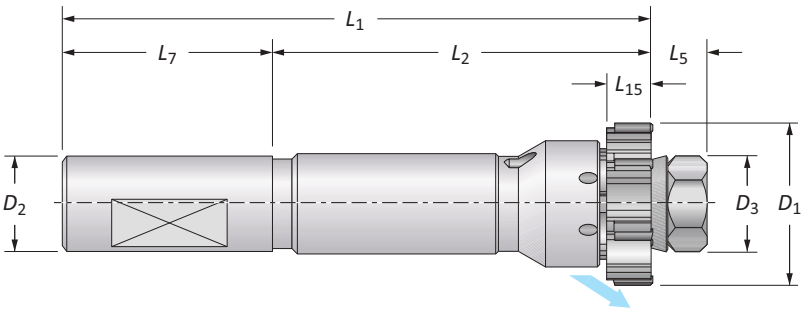

Building Your Complete Tool

You will need both pieces to complete your ring style reamer assembly. There is a guide on the page where the rings are located. You must follow the guide to build the item number for the reamer ring that you need.

However, the complete mandrel item numbers are listed on their respective pages. You do not need to build the mandrel numbers.

1

Select Your Ring

2

Select Your Mandrel

A DRILLING
B BORING
C REAMING
D BURNISHING
E THREADING
X SPECIALS

Cutting Rings

Imperial (inch) | Diameter Range: 0.6929" - 7.8976"

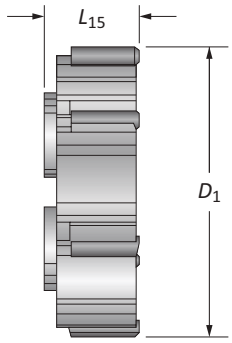

D_1 Range Imperial (inch)	L_{15} Straight Flute	L_{15} Helical Flute	Number of Teeth
1.2835 - 1.7952	0.630	0.630	6
1.7953 - 3.1338	0.728	0.728	6
3.1339 - 3.9606	0.728	0.728	8
3.9607 - 4.3543	0.728	0.728	10
4.3544 - 7.8976	0.728	0.728	12

I 2ANC–ST F – 019686 + 0002 – 0002

- I: Imperial Diameter
- 2ANC–ST: Cermet with TiN Coating
- F: F Lead-in
- 019686: Diameter
- 0002 – 0002: Tolerance

Coating and Substrate Codes

Grade	Uncoated	TiN	TiCN	TiAlN	Alcrona	Hardcut	R Coating	T Coating
Carbide	2000-KT	2TIN-KT	2TIC-KT	2TIA-KT	2TLK-KT	2TLH-KT	2TLR-KT	2TLT-KT
Cermet	2AVC-ST	2ANC-ST	2ACC-ST	2AAC-ST	2ALK-ST	2ALH-ST	2ALR-ST	2ALT-ST

Lead-in Recommendation (Straight Flute)

ISO Material	T	F	N	G	L	A	V	K
P			●	●		◐	○	◐
S	●			◐				
M			◐	●				◐
H			◐	●				
K				◐			●	◐
N				●			◐	

● Best ◐ Better ○ Good

Lead-in Recommendation (Helical Flute)

ISO Material	E	M
P	●	
S	●	◐
M	●	
H	◐	●
K	◐	●
N	●	◐

● Best ◐ Better ○ Good

C: 68 - 87

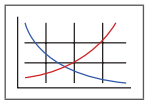

Key on C: 1

C: 40 - 59

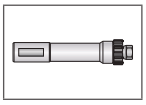

C: 60 - 65

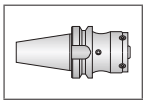

C: 92

Cutting Rings

Metric (mm) | Diameter Range: 17.600 mm - 200.60 mm

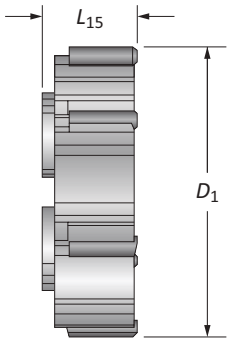

D_1 Range Metric (mm)	L_{15} Straight Flute	L_{15} Helical Flute	Number of Teeth
32.600 - 45.599	16.00	16.00	6
45.600 - 79.599	18.50	18.50	6
79.600 - 100.599	18.50	18.50	8
100.600 - 110.599	18.50	18.50	10
110.600 - 200.600	18.50	18.50	12

2ANC–ST F – 055298 + 003 – 003

- 2ANC–ST: Cermet with TiN Coating
- F: F Lead-in
- 055298: Diameter
- 003 – 003: Tolerance

Coating and Substrate Codes

Grade	Uncoated	TiN	TiCN	TiAlN	Alcrona	Hardcut	R Coating	T Coating
Carbide	2000-KT	2TIN-KT	2TIC-KT	2TIA-KT	2TLK-KT	2TLH-KT	2TLR-KT	2TLT-KT
Cermet	2AVC-ST	2ANC-ST	2ACC-ST	2AAC-ST	2ALK-ST	2ALH-ST	2ALR-ST	2ALT-ST

Lead-in Recommendation (Straight Flute)

ISO Material	T	F	N	G	L	A	V	K
P			●	●		◐	○	◐
S	●			◐				
M			◐	●				◐
H			◐	●				
K				◐			●	◐
N				●			◐	

● Best ◐ Better ○ Good

Lead-in Recommendation (Helical Flute)

ISO Material	E	M
P	●	
S	●	◐
M	●	
H	◐	●
K	◐	●
N	●	◐

● Best ◐ Better ○ Good

C: 68 - 87

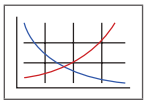

Key on C:1

C: 40 - 59

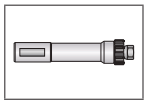

C: 60 - 65

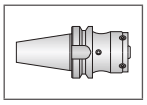

C: 92

A DRILLING
B BORING
C REAMING
D BURNISHING
E THREADING
X SPECIALS

Ring Style Mandrels

4550 Series | Short Length | Diameter Range: 0.6929" - 3.9606" (17.600 mm - 100.599 mm)

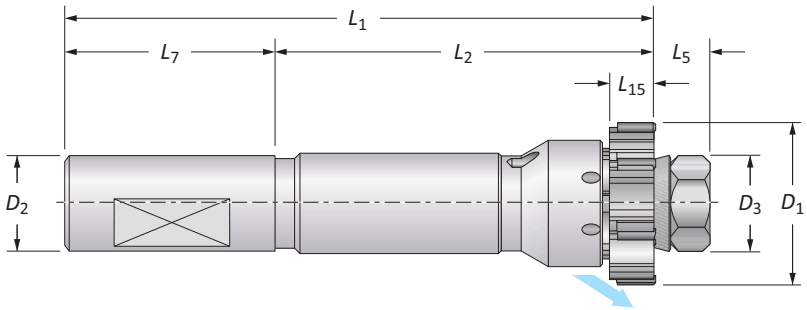

Series	4550	Shank Type	Cylindrical	Application	Through Holes	Coolant	Radial

	D_1 Range	Mandrel D_3	Mandrel L_5	Mandrel L_{15}	Mandrel L_2	Mandrel L_1	Shank L_7	Shank D_2	Teeth	Part No. (Complete Mandrel^) With Flat	Part No. (Complete Mandrel^) Without Flat
	0.6929 - 0.8504	0.472	0.433	0.433	3.189	5.591	1.969	0.750	6	**94550-MC-010***	**94550A-MC-010***
	0.8505 - 1.0078	0.472	0.433	0.472	3.189	5.591	1.969	0.750	6	**94550-MC-020***	**94550A-MC-020***
	1.0079 - 1.2834	0.614	0.433	0.551	4.016	6.417	1.969	0.750	6	**94550-MC-030***	**94550A-MC-030***
	1.2835 - 1.5984	0.866	0.551	0.630	4.016	6.772	2.205	1.000	6	**94550-MC-040**	**94550A-MC-040**
	1.5985 - 1.7952	1.000	0.591	0.630	4.016	6.811	2.205	1.000	6	**94550-MC-050**	**94550A-MC-050**
i	1.7953 - 1.9527	1.181	0.807	0.728	4.134	7.303	2.362	1.250	6	**94550-MC-060**	**94550A-MC-060**
	1.9528 - 2.3858	1.181	0.807	0.728	4.134	7.303	2.362	1.250	6	**94550-MC-070**	**94550A-MC-070**
	2.3859 - 2.7795	1.575	0.965	0.728	4.134	7.461	2.362	1.250	6	**94550-MC-080**	**94550A-MC-080**
	2.7796 - 3.1338	1.575	0.965	0.728	4.134	7.461	2.362	1.250	6	**94550-MC-090**	**94550A-MC-090**
	3.1339 - 3.5669	2.205	1.122	0.728	4.134	8.012	2.756	1.500	8	**94550-MC-100**	**94550A-MC-100**
	3.5670 - 3.9606	2.205	1.122	0.728	4.134	8.012	2.756	1.500	8	**94550-MC-110**	**94550A-MC-110**
	17.600 - 21.599	12	11	11	81	142	50	20	6	**4550-MC-010***	**4550A-MC-010***
	21.600 - 25.599	12	11	12	81	142	50	20	6	**4550-MC-020***	**4550A-MC-020***
	25.600 - 32.599	15.6	11	14	102	163	50	20	6	**4550-MC-030***	**4550A-MC-030***
	32.600 - 40.599	22	14	16	102	172	56	25	6	**4550-MC-040**	**4550A-MC-040**
	40.600 - 45.599	25.4	15	16	102	173	56	25	6	**4550-MC-050**	**4550A-MC-050**
m	45.600 - 49.599	30	20.5	18.5	105	185.5	60	32	6	**4550-MC-060**	**4550A-MC-060**
	49.600 - 60.599	30	20.5	18.5	105	185.5	60	32	6	**4550-MC-070**	**4550A-MC-070**
	60.600 - 70.599	40	24.5	18.5	105	189.5	60	32	6	**4550-MC-080**	**4550A-MC-080**
	70.600 - 79.599	40	24.5	18.5	105	189.5	60	32	6	**4550-MC-090**	**4550A-MC-090**
	79.600 - 90.599	56	28.5	18.5	105	203.5	70	40	8	**4550-MC-100**	**4550A-MC-100**
	90.600 - 100.599	56	28.5	18.5	105	203.5	70	40	8	**4550-MC-110**	**4550A-MC-110**

^Complete mandrel does not include cutting ring.
*0.6929" - 1.2834" (17.600 mm - 32.599 mm) diameter cutting rings are available as specials by contacting Application Engineering.

C: 68 - 87
Key on C: 1

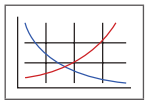

C: 38 - 39

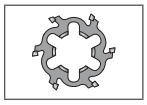

C: 60 - 65

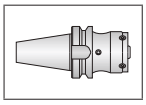

C: 92

i = Imperial (in)
m = Metric (mm)

Ring Style Mandrels

4550 Series | Short Length | Spare Parts

	Part No. (Complete Mandrel^)		Spare Parts 1		2	3	
	With Flat	Without Flat	Drive Pins	Number of Drive Pins	Conical Ring	Nut	Wrench Size (mm)
	94550-MC-010	94550A-MC-010	2000-CO-010	3	2010-AC-010	2000-DA-010	10
	94550-MC-020	94550A-MC-020	2000-CO-020	3	2010-AC-010	2000-DA-010	10
	94550-MC-030	94550A-MC-030	2000-CO-030	3	2010-AC-020	2000-DA-020	13
	94550-MC-040	94550A-MC-040	2000-CO-040	2	2010-AC-030	2000-DA-060	19
	94550-MC-050	94550A-MC-050	2000-CO-060	2	2010-AC-040	2000-DA-090	22
i	94550-MC-060	94550A-MC-060	2000-CO-060	2	2010-AC-050	2000-GH-880	30 ◆
	94550-MC-070	94550A-MC-070	2000-CO-070	2	2010-AC-050	2000-GH-880	30 ◆
	94550-MC-080	94550A-MC-080	2000-CO-080	2	2010-AC-060	2000-GH-900	40 ◆
	94550-MC-090	94550A-MC-090	2000-CO-090	2	2010-AC-060	2000-GH-900	40 ◆
	94550-MC-100	94550A-MC-100	2000-CO-090	2	2010-AC-070	2000-GH-920	56 ◆
	94550-MC-110	94550A-MC-110	2000-CO-090	2	2010-AC-070	2000-GH-920	56 ◆
	4550-MC-010	4550A-MC-010	2000-CO-010	3	2010-AC-010	2000-DA-010	10
	4550-MC-020	4550A-MC-020	2000-CO-020	3	2010-AC-010	2000-DA-010	10
	4550-MC-030	4550A-MC-030	2000-CO-030	3	2010-AC-020	2000-DA-020	13
	4550-MC-040	4550A-MC-040	2000-CO-040	2	2010-AC-030	2000-DA-060	19
	4550-MC-050	4550A-MC-050	2000-CO-060	2	2010-AC-040	2000-DA-090	22
m	4550-MC-060	4550A-MC-060	2000-CO-060	2	2010-AC-050	2000-GH-880	30 ◆
	4550-MC-070	4550A-MC-070	2000-CO-070	2	2010-AC-050	2000-GH-880	30 ◆
	4550-MC-080	4550A-MC-080	2000-CO-080	2	2010-AC-060	2000-GH-900	40 ◆
	4550-MC-090	4550A-MC-090	2000-CO-090	2	2010-AC-060	2000-GH-900	40 ◆
	4550-MC-100	4550A-MC-100	2000-CO-090	2	2010-AC-070	2000-GH-920	56 ◆
	4550-MC-110	4550A-MC-110	2000-CO-090	2	2010-AC-070	2000-GH-920	56 ◆

^Complete mandrel does not include cutting ring.
◆ Spanner wrench.

C: 68 - 87 C: 38 - 39 C: 60 - 65 C: 92

Key on C: 1

i = Imperial (in)
m = Metric (mm)

A DRILLING
B BORING
C REAMING
D BURNISHING
E THREADING
X SPECIALS

Ring Style Mandrels

4555 Series | Short Length | Diameter Range: 0.6929" - 3.9606" (17.600 mm - 100.599 mm)

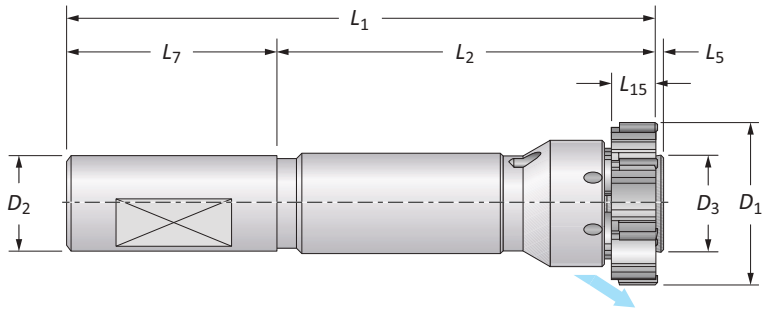

Series	4555	Shank Type	Cylindrical	Application	Blind Holes	Coolant	Radial

	Mandrel					Shank			Part No. (Complete Mandrel^)	
D_1 Range	D_3	L_5	L_{15}	L_2	L_1	L_7	D_2	Teeth	With Flat	Without Flat
0.6929 - 0.8504	0.441	0.039	0.433	3.189	5.197	1.969	0.750	6	**94555-MC-010***	**94555A-MC-010***
0.8505 - 1.0078	0.441	0.039	0.472	3.189	5.197	1.969	0.750	6	**94555-MC-020***	**94555A-MC-020***
1.0079 - 1.1653	0.594	0.039	0.551	4.016	6.024	1.969	0.750	6	**94555-MC-030***	**94555A-MC-030***
1.1654 - 1.2834	0.594	0.039	0.551	4.016	6.024	1.969	0.750	6	**94555-MC-035***	**94555A-MC-035***
1.2835 - 1.4409	0.799	0.039	0.630	4.016	6.260	2.205	1.000	6	**94555-MC-040**	**94555A-MC-040**
1.4410 - 1.5984	0.799	0.039	0.630	4.016	6.260	2.205	1.000	6	**94555-MC-045**	**94555A-MC-045**
1.5985 - 1.7952	0.949	0.039	0.630	4.016	6.260	2.205	1.000	6	**94555-MC-050**	**94555A-MC-050**
i 1.7953 - 1.9527	1.098	0.059	0.728	4.134	6.555	2.362	1.250	6	**94555-MC-060**	**94555A-MC-060**
1.9528 - 2.1889	1.098	0.059	0.728	4.134	6.555	2.362	1.250	6	**94555-MC-070**	**94555A-MC-070**
2.1890 - 2.3858	1.098	0.059	0.728	4.134	6.555	2.362	1.250	6	**94555-MC-075**	**94555A-MC-075**
2.3859 - 2.5826	1.461	0.059	0.728	4.134	6.555	2.362	1.250	6	**94555-MC-080**	**94555A-MC-080**
2.5827 - 2.7795	1.461	0.059	0.728	4.134	6.555	2.362	1.250	6	**94555-MC-085**	**94555A-MC-085**
2.7796 - 3.1338	1.461	0.059	0.728	4.134	6.555	2.362	1.250	6	**94555-MC-090**	**94555A-MC-090**
3.1339 - 3.5669	2.091	0.059	0.728	4.134	6.949	2.756	1.500	8	**94555-MC-100**	**94555A-MC-100**
3.5670 - 3.9606	2.091	0.059	0.728	4.134	6.949	2.756	1.500	8	**94555-MC-110**	**94555A-MC-110**
17.600 - 21.599	11.2	1	11	81	132	50	20	6	**4555-MC-010***	**4555A-MC-010***
21.600 - 25.599	11.2	1	12	81	132	50	20	6	**4555-MC-020***	**4555A-MC-020***
25.600 - 29.599	15.1	1	14	102	153	50	20	6	**4555-MC-030***	**4555A-MC-030***
29.600 - 32.599	15.1	1	14	102	153	50	20	6	**4555-MC-035***	**4555A-MC-035***
32.600 - 36.599	20.3	1	16	102	159	56	25	6	**4555-MC-040**	**4555A-MC-040**
36.600 - 40.599	20.3	1	16	102	159	56	25	6	**4555-MC-045**	**4555A-MC-045**
40.600 - 45.599	24.1	1	16	102	159	56	25	6	**4555-MC-050**	**4555A-MC-050**
m 45.600 - 49.599	27.9	1.5	18.5	105	166.5	60	32	6	**4555-MC-060**	**4555A-MC-060**
49.600 - 55.599	27.9	1.5	18.5	105	166.5	60	32	6	**4555-MC-070**	**4555A-MC-070**
55.600 - 60.599	27.9	1.5	18.5	105	166.5	60	32	6	**4555-MC-075**	**4555A-MC-075**
60.600 - 65.599	37.1	1.5	18.5	105	166.5	60	32	6	**4555-MC-080**	**4555A-MC-080**
65.600 - 70.599	37.1	1.5	18.5	105	166.5	60	32	6	**4555-MC-085**	**4555A-MC-085**
70.600 - 79.599	37.1	1.5	18.5	105	166.5	60	32	6	**4555-MC-090**	**4555A-MC-090**
79.600 - 90.599	53.1	1.5	18.5	105	176.5	70	40	8	**4555-MC-100**	**4555A-MC-100**
90.600 - 100.599	53.1	1.5	18.5	105	176.5	70	40	8	**4555-MC-110**	**4555A-MC-110**

^Complete mandrel does not include cutting ring.
*0.6929" - 1.2834" (17.600 mm - 32.599 mm) diameter cutting rings are available as specials by contacting Application Engineering.

C: 68 - 87
Key on C: 1
C: 38 - 39
C: 60 - 65
C: 92

i = Imperial (in)
m = Metric (mm)

Ring Style Mandrels

4555 Series | Short Length | Spare Parts

	Part No. (Complete Mandrel^)		Spare Parts 1		2			3	
	With Flat	Without Flat	Drive Pins	Number of Drive Pins	Conical Ring	Conical Ring (2nd Expansion)	Conical Ring (3rd Expansion)	Adjusting Key	Wrench Size (mm)
	94555-MC-010	**94555A-MC-010**	2000-CO-010	3	4001-AC-115	4001-AC-215	–	4001-CH-015	10
	94555-MC-020	**94555A-MC-020**	2000-CO-020	3	4001-AC-115	4001-AC-215	–	4001-CH-015	10
	94555-MC-030	**94555A-MC-030**	2000-CO-030	3	4001-AC-125	4001-AC-225	4001-AC-325	4001-CH-025	13
	94555-MC-035	**94555A-MC-035**	2000-CO-040	2	4001-AC-125	4001-AC-225	4001-AC-325	4001-CH-025	13
	94555-MC-040	**94555A-MC-040**	2000-CO-040	2	4001-AC-135	4001-AC-235	4001-AC-335	4001-CH-035	18
	94555-MC-045	**94555A-MC-045**	2000-CO-050	2	4001-AC-135	4001-AC-235	4001-AC-335	4001-CH-035	18
	94555-MC-050	**94555A-MC-050**	2000-CO-060	2	4001-AC-145	4001-AC-245	4001-AC-345	4001-CH-045	22
i	**94555-MC-060**	**94555A-MC-060**	2000-CO-060	2	4001-AC-155	4001-AC-255	4001-AC-355	4001-CH-055	26
	94555-MC-070	**94555A-MC-070**	2000-CO-070	2	4001-AC-155	4001-AC-255	4001-AC-355	4001-CH-055	26
	94555-MC-075	**94555A-MC-075**	2000-CO-080	2	4001-AC-155	4001-AC-255	4001-AC-355	4001-CH-055	26
	94555-MC-080	**94555A-MC-080**	2000-CO-080	2	4001-AC-165	4001-AC-265	4001-AC-365	4001-CH-065	34
	94555-MC-085	**94555A-MC-085**	2000-CO-090	2	4001-AC-165	4001-AC-265	4001-AC-365	4001-CH-065	34
	94555-MC-090	**94555A-MC-090**	2000-CO-090	2	4001-AC-165	4001-AC-265	4001-AC-365	4001-CH-065	34
	94555-MC-100	**94555A-MC-100**	2000-CO-090	2	4001-AC-185	4001-AC-285	4001-AC-385	4001-CH-085	46
	94555-MC-110	**94555A-MC-110**	2000-CO-090	2	4001-AC-185	4001-AC-285	4001-AC-385	4001-CH-085	46
	4555-MC-010	**4555A-MC-010**	2000-CO-010	3	4001-AC-115	4001-AC-215	–	4001-CH-015	10
	4555-MC-020	**4555A-MC-020**	2000-CO-020	3	4001-AC-115	4001-AC-215	–	4001-CH-015	10
	4555-MC-030	**4555A-MC-030**	2000-CO-030	3	4001-AC-125	4001-AC-225	4001-AC-325	4001-CH-025	13
	4555-MC-035	**4555A-MC-035**	2000-CO-040	2	4001-AC-125	4001-AC-225	4001-AC-325	4001-CH-025	13
	4555-MC-040	**4555A-MC-040**	2000-CO-040	2	4001-AC-135	4001-AC-235	4001-AC-335	4001-CH-035	18
	4555-MC-045	**4555A-MC-045**	2000-CO-050	2	4001-AC-135	4001-AC-235	4001-AC-335	4001-CH-035	18
	4555-MC-050	**4555A-MC-050**	2000-CO-060	2	4001-AC-145	4001-AC-245	4001-AC-345	4001-CH-045	22
m	**4555-MC-060**	**4555A-MC-060**	2000-CO-060	2	4001-AC-155	4001-AC-255	4001-AC-355	4001-CH-055	26
	4555-MC-070	**4555A-MC-070**	2000-CO-070	2	4001-AC-155	4001-AC-255	4001-AC-355	4001-CH-055	26
	4555-MC-075	**4555A-MC-075**	2000-CO-080	2	4001-AC-155	4001-AC-255	4001-AC-355	4001-CH-055	26
	4555-MC-080	**4555A-MC-080**	2000-CO-080	2	4001-AC-165	4001-AC-265	4001-AC-365	4001-CH-065	34
	4555-MC-085	**4555A-MC-085**	2000-CO-090	2	4001-AC-165	4001-AC-265	4001-AC-365	4001-CH-065	34
	4555-MC-090	**4555A-MC-090**	2000-CO-090	2	4001-AC-165	4001-AC-265	4001-AC-365	4001-CH-065	34
	4555-MC-100	**4555A-MC-100**	2000-CO-090	2	4001-AC-185	4001-AC-285	4001-AC-385	4001-CH-085	46
	4555-MC-110	**4555A-MC-110**	2000-CO-090	2	4001-AC-185	4001-AC-285	4001-AC-385	4001-CH-085	46

^Complete mandrel does not include cutting ring.

C: 68 - 87 C: 38 - 39 C: 60 - 65 C: 92
Key on C: 1

i = Imperial (in)
m = Metric (mm)

A DRILLING
B BORING
C REAMING
D BURNISHING
E THREADING
X SPECIALS

Ring Style Mandrels

4500 Series | Long Length | Diameter Range: 0.6929" - 3.9606" (17.600 mm - 100.599 mm)

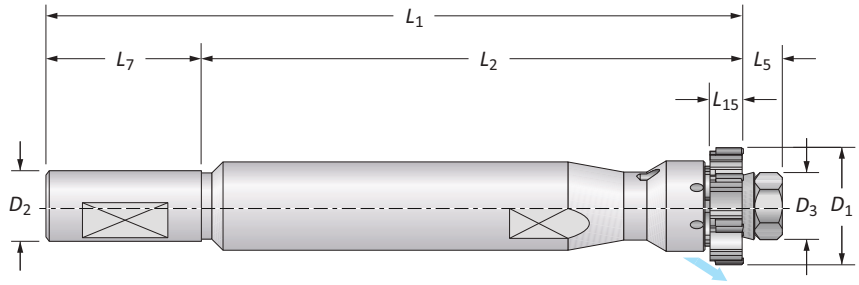

Series	4500	Shank Type	Cylindrical	Application	Through Holes	Coolant	Radial

	D_1 Range	Mandrel D_3	Mandrel L_5	Mandrel L_{15}	Mandrel L_2	Mandrel L_1	Shank L_7	Shank D_2	Teeth	Part No. (Complete Mandrel^) With Flat	Part No. (Complete Mandrel^) Without Flat
	0.6929 - 0.8504	0.472	0.433	0.433	4.764	7.165	1.969	0.750	6	**94500-MC-010***	**94500A-MC-010***
	0.8505 - 1.0078	0.472	0.433	0.472	4.764	7.165	1.969	0.750	6	**94500-MC-020***	**94500A-MC-020***
	1.0079 - 1.2834	0.614	0.433	0.551	6.024	8.425	1.969	0.750	6	**94500-MC-030***	**94500A-MC-030***
	1.2835 - 1.5984	0.866	0.551	0.630	7.047	9.803	2.205	1.000	6	**94500-MC-040**	**94500A-MC-040**
	1.5985 - 1.7952	0.866	0.551	0.630	7.047	9.803	2.205	1.000	6	**94500-MC-050**	**94500A-MC-050**
i	1.7953 - 1.9527	1.000	0.591	0.630	7.913	10.709	2.205	1.000	6	**94500-MC-060**	**94500A-MC-060**
	1.9528 - 2.3858	1.181	0.807	0.728	8.425	11.594	2.362	1.250	6	**94500-MC-070**	**94500A-MC-070**
	2.3859 - 2.7795	1.575	0.965	0.728	9.331	12.657	2.362	1.250	6	**94500-MC-080**	**94500A-MC-080**
	2.7796 - 3.1338	1.575	0.965	0.728	9.331	12.657	2.362	1.250	6	**94500-MC-090**	**94500A-MC-090**
	3.1339 - 3.5669	2.205	1.122	0.728	9.646	13.524	2.756	1.500	6	**94500-MC-100**	**94500A-MC-100**
	3.5670 - 3.9606	2.205	1.122	0.728	9.646	13.524	2.756	1.500	8	**94500-MC-110**	**94500A-MC-110**
	17.600 - 21.599	12	11	11	121	182	50	20	6	**4500-MC-010***	**4500A-MC-010***
	21.600 - 25.599	12	11	12	121	182	50	20	6	**4500-MC-020***	**4500A-MC-020***
	25.600 - 32.599	15.6	11	14	153	214	50	20	6	**4500-MC-030***	**4500A-MC-030***
	32.600 - 40.599	22	14	16	179	249	56	25	6	**4500-MC-040**	**4500A-MC-040**
	40.600 - 45.599	25.4	15	16	201	272	56	25	6	**4500-MC-050**	**4500A-MC-050**
m	45.600 - 49.599	30	20.5	18.5	214	294.5	60	32	6	**4500-MC-060**	**4500A-MC-060**
	49.600 - 60.599	30	20.5	18.5	214	294.5	60	32	6	**4500-MC-070**	**4500A-MC-070**
	60.600 - 70.599	40	24.5	18.5	237	321.5	60	32	6	**4500-MC-080**	**4500A-MC-080**
	70.600 - 79.599	40	24.5	18.5	237	321.5	60	32	6	**4500-MC-090**	**4500A-MC-090**
	79.600 - 90.599	56	28.5	18.5	245	343.5	70	40	6	**4500-MC-100**	**4500A-MC-100**
	90.600 - 100.599	56	28.5	18.5	245	343.5	70	40	8	**4500-MC-110**	**4500A-MC-110**

^Complete mandrel does not include cutting ring.
*0.6929" - 1.2834" (17.600 mm - 32.599 mm) diameter cutting rings are available as specials by contacting Application Engineering.

C: 68 - 87
Key on C: 1
C: 38 - 39
C: 60 - 65
C: 92

i = Imperial (in)
m = Metric (mm)

Ring Style Mandrels

4500 Series | Long Length | Spare Parts

	Part No. (Complete Mandrel^)		Spare Parts 1		2	3	
	With Flat	Without Flat	Drive Pins	Number of Drive Pins	Conical Ring	Nut	Wrench Size (mm)
	94500-MC-010	94500A-MC-010	2000-CO-010	3	2010-AC-010	2000-DA-010	10
	94500-MC-020	94500A-MC-020	2000-CO-020	3	2010-AC-010	2000-DA-010	10
	94500-MC-030	94500A-MC-030	2000-CO-030	3	2010-AC-020	2000-DA-020	13
	94500-MC-040	94500A-MC-040	2000-CO-040	2	2010-AC-030	2000-DA-060	19
	94500-MC-050	94500A-MC-050	2000-CO-060	2	2010-AC-040	2000-DA-090	22
i	94500-MC-060	94500A-MC-060	2000-CO-060	2	2010-AC-050	2000-GH-880	30 ◆
	94500-MC-070	94500A-MC-070	2000-CO-070	2	2010-AC-050	2000-GH-880	30 ◆
	94500-MC-080	94500A-MC-080	2000-CO-080	2	2010-AC-060	2000-GH-900	40 ◆
	94500-MC-090	94500A-MC-090	2000-CO-090	2	2010-AC-060	2000-GH-900	40 ◆
	94500-MC-100	94500A-MC-100	2000-CO-090	2	2010-AC-070	2000-GH-920	56 ◆
	94500-MC-110	94500A-MC-110	2000-CO-090	2	2010-AC-070	2000-GH-920	56 ◆
	4500-MC-010	4500A-MC-010	2000-CO-010	3	2010-AC-010	2000-DA-010	10
	4500-MC-020	4500A-MC-020	2000-CO-020	3	2010-AC-010	2000-DA-010	10
	4500-MC-030	4500A-MC-030	2000-CO-030	3	2010-AC-020	2000-DA-020	13
	4500-MC-040	4500A-MC-040	2000-CO-040	2	2010-AC-030	2000-DA-060	19
	4500-MC-050	4500A-MC-050	2000-CO-060	2	2010-AC-040	2000-DA-090	22
m	4500-MC-060	4500A-MC-060	2000-CO-060	2	2010-AC-050	2000-GH-880	30 ◆
	4500-MC-070	4500A-MC-070	2000-CO-070	2	2010-AC-050	2000-GH-880	30 ◆
	4500-MC-080	4500A-MC-080	2000-CO-080	2	2010-AC-060	2000-GH-900	40 ◆
	4500-MC-090	4500A-MC-090	2000-CO-090	2	2010-AC-060	2000-GH-900	40 ◆
	4500-MC-100	4500A-MC-100	2000-CO-090	2	2010-AC-070	2000-GH-920	56 ◆
	4500-MC-110	4500A-MC-110	2000-CO-090	2	2010-AC-070	2000-GH-920	56 ◆

^Complete mandrel does not include cutting ring.
◆ Spanner wrench.

C: 68 - 87
Key on C: 1
C: 38 - 39
C: 60 - 65
C: 92

i = Imperial (in)
m = Metric (mm)

A DRILLING
B BORING
C REAMING
D BURNISHING
E THREADING
X SPECIALS

Ring Style Mandrels

4505 Series | Long Length | Diameter Range: 0.6929" - 3.9606" (17.600 mm - 100.599 mm)

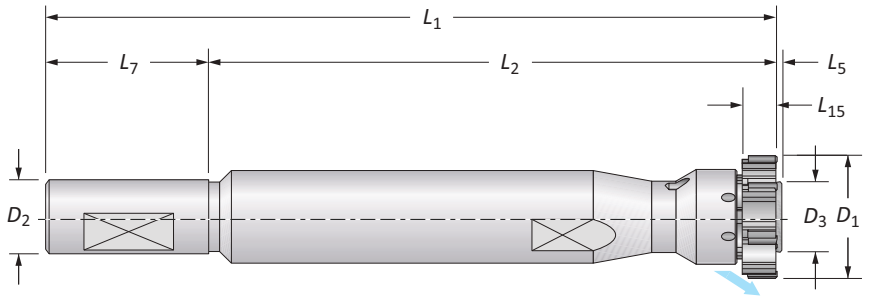

Series	4505	Shank Type	Cylindrical	Application	Blind Holes	Coolant	Radial

		Mandrel					Shank			Part No. (Complete Mandrel^)	
	D_1 Range	D_3	L_5	L_{15}	L_2	L_1	L_7	D_2	Teeth	With Flat	Without Flat
	0.6929 - 0.8504	0.441	0.039	0.433	4.764	6.772	1.969	0.750	6	**94505-MC-010***	**94505A-MC-010***
	0.8505 - 1.0078	0.441	0.039	0.472	4.764	6.772	1.969	0.750	6	**94505-MC-020***	**94505A-MC-020***
	1.0079 - 1.1653	0.594	0.039	0.551	6.024	8.031	1.969	0.750	6	**94505-MC-030***	**94505A-MC-030***
	1.1654 - 1.2834	0.594	0.039	0.551	6.024	8.031	1.969	0.750	6	**94505-MC-035***	**94505A-MC-035***
	1.2835 - 1.4409	0.799	0.039	0.630	7.047	9.291	2.205	1.000	6	**94505-MC-040**	**94505A-MC-040**
	1.4410 - 1.5984	0.799	0.039	0.630	7.047	9.291	2.205	1.000	6	**94505-MC-045**	**94505A-MC-045**
	1.5985 - 1.7952	0.949	0.039	0.630	7.913	10.157	2.205	1.000	6	**94505-MC-050**	**94505A-MC-050**
i	1.7953 - 1.9527	1.098	0.059	0.728	8.425	10.846	2.362	1.250	6	**94505-MC-060**	**94505A-MC-060**
	1.9528 - 2.1889	1.098	0.059	0.728	8.425	10.846	2.362	1.250	6	**94505-MC-070**	**94505A-MC-070**
	2.1890 - 2.3858	1.098	0.059	0.728	8.425	10.846	2.362	1.250	6	**94505-MC-075**	**94505A-MC-075**
	2.3859 - 2.5826	1.461	0.059	0.728	9.331	11.752	2.362	1.250	6	**94505-MC-080**	**94505A-MC-080**
	2.5827 - 2.7795	1.461	0.059	0.728	9.331	11.752	2.362	1.250	6	**94505-MC-085**	**94505A-MC-085**
	2.7796 - 3.1338	1.461	0.059	0.728	9.331	11.752	2.362	1.250	6	**94505-MC-090**	**94505A-MC-090**
	3.1339 - 3.5669	2.091	0.059	0.728	9.646	12.461	2.756	1.500	8	**94505-MC-100**	**94505A-MC-100**
	3.5670 - 3.9606	2.091	0.059	0.728	9.646	12.461	2.756	1.500	8	**94505-MC-110**	**94505A-MC-110**
	17.600 - 21.599	11.2	1	11	121	172	50	20	6	**4505-MC-010***	**4505A-MC-010***
	21.600 - 25.599	11.2	1	12	121	172	50	20	6	**4505-MC-020***	**4505A-MC-020***
	25.600 - 29.599	15.1	1	14	153	204	50	20	6	**4505-MC-030***	**4505A-MC-030***
	29.600 - 32.599	15.1	1	14	153	204	50	20	6	**4505-MC-035***	**4505A-MC-035***
	32.600 - 36.599	20.3	1	16	179	236	56	25	6	**4505-MC-040**	**4505A-MC-040**
	36.600 - 40.599	20.3	1	16	179	236	56	25	6	**4505-MC-045**	**4505A-MC-045**
	40.600 - 45.599	24.1	1	16	201	258	56	25	6	**4505-MC-050**	**4505A-MC-050**
m	45.600 - 49.599	27.9	1.5	18.5	214	275.5	60	32	6	**4505-MC-060**	**4505A-MC-060**
	49.600 - 55.599	27.9	1.5	18.5	214	275.5	60	32	6	**4505-MC-070**	**4505A-MC-070**
	55.600 - 60.599	27.9	1.5	18.5	214	275.5	60	32	6	**4505-MC-075**	**4505A-MC-075**
	60.600 - 65.599	37.1	1.5	18.5	237	298.5	60	32	6	**4505-MC-080**	**4505A-MC-080**
	65.600 - 70.599	37.1	1.5	18.5	237	298.5	60	32	6	**4505-MC-085**	**4505A-MC-085**
	70.600 - 79.599	37.1	1.5	18.5	237	298.5	60	32	6	**4505-MC-090**	**4505A-MC-090**
	79.600 - 90.599	53.1	1.5	18.5	245	316.5	70	40	8	**4505-MC-100**	**4505A-MC-100**
	90.600 - 100.599	53.1	1.5	18.5	245	316.5	70	40	8	**4505-MC-110**	**4505A-MC-110**

^Complete mandrel does not include cutting ring.
*0.6929" - 1.2834" (17.600 mm - 32.599 mm) diameter cutting rings are available as specials by contacting Application Engineering.

C: 68 - 87 C: 38 - 39 C: 60 - 65 C: 92

Key on C: 1

i = Imperial (in)
m = Metric (mm)

Ring Style Mandrels

4505 Series | Long Length | Spare Parts

	Part No. (Complete Mandrel^)		Spare Parts 1		2			3	
	With Flat	Without Flat	Drive Pins	Number of Drive Pins	Conical Ring	Conical Ring (2nd Expansion)	Conical Ring (3rd Expansion)	Adjusting Key	Wrench Size (mm)
	94505-MC-010	**94505A-MC-010**	2000-CO-010	3	4001-AC-115	4001-AC-215	–	4001-CH-015	10
	94505-MC-020	**94505A-MC-020**	2000-CO-020	3	4001-AC-115	4001-AC-215	–	4001-CH-015	10
	94505-MC-030	**94505A-MC-030**	2000-CO-030	3	4001-AC-125	4001-AC-225	4001-AC-325	4001-CH-025	13
	94505-MC-035	**94505A-MC-035**	2000-CO-040	2	4001-AC-125	4001-AC-225	4001-AC-325	4001-CH-025	13
	94505-MC-040	**94505A-MC-040**	2000-CO-040	2	4001-AC-135	4001-AC-235	4001-AC-335	4001-CH-035	18
	94505-MC-045	**94505A-MC-045**	2000-CO-050	2	4001-AC-135	4001-AC-235	4001-AC-335	4001-CH-035	18
	94505-MC-050	**94505A-MC-050**	2000-CO-060	2	4001-AC-145	4001-AC-245	4001-AC-345	4001-CH-045	22
i	**94505-MC-060**	**94505A-MC-060**	2000-CO-060	2	4001-AC-155	4001-AC-255	4001-AC-355	4001-CH-055	26
	94505-MC-070	**94505A-MC-070**	2000-CO-070	2	4001-AC-155	4001-AC-255	4001-AC-355	4001-CH-055	26
	94505-MC-075	**94505A-MC-075**	2000-CO-080	2	4001-AC-155	4001-AC-255	4001-AC-355	4001-CH-055	26
	94505-MC-080	**94505A-MC-080**	2000-CO-080	2	4001-AC-165	4001-AC-265	4001-AC-365	4001-CH-065	34
	94505-MC-085	**94505A-MC-085**	2000-CO-090	2	4001-AC-165	4001-AC-265	4001-AC-365	4001-CH-065	34
	94505-MC-090	**94505A-MC-090**	2000-CO-090	2	4001-AC-165	4001-AC-265	4001-AC-365	4001-CH-065	34
	94505-MC-100	**94505A-MC-100**	2000-CO-090	2	4001-AC-185	4001-AC-285	4001-AC-385	4001-CH-085	46
	94505-MC-110	**94505A-MC-110**	2000-CO-090	2	4001-AC-185	4001-AC-285	4001-AC-385	4001-CH-085	46
	4505-MC-010	**4505A-MC-010**	2000-CO-010	3	4001-AC-115	4001-AC-215	–	4001-CH-015	10
	4505-MC-020	**4505A-MC-020**	2000-CO-020	3	4001-AC-115	4001-AC-215	–	4001-CH-015	10
	4505-MC-030	**4505A-MC-030**	2000-CO-030	3	4001-AC-125	4001-AC-225	4001-AC-325	4001-CH-025	13
	4505-MC-035	**4505A-MC-035**	2000-CO-040	2	4001-AC-125	4001-AC-225	4001-AC-325	4001-CH-025	13
	4505-MC-040	**4505A-MC-040**	2000-CO-040	2	4001-AC-135	4001-AC-235	4001-AC-335	4001-CH-035	18
	4505-MC-045	**4505A-MC-045**	2000-CO-050	2	4001-AC-135	4001-AC-235	4001-AC-335	4001-CH-035	18
	4505-MC-050	**4505A-MC-050**	2000-CO-060	2	4001-AC-145	4001-AC-245	4001-AC-345	4001-CH-045	22
m	**4505-MC-060**	**4505A-MC-060**	2000-CO-060	2	4001-AC-155	4001-AC-255	4001-AC-355	4001-CH-055	26
	4505-MC-070	**4505A-MC-070**	2000-CO-070	2	4001-AC-155	4001-AC-255	4001-AC-355	4001-CH-055	26
	4505-MC-075	**4505A-MC-075**	2000-CO-080	2	4001-AC-155	4001-AC-255	4001-AC-355	4001-CH-055	26
	4505-MC-080	**4505A-MC-080**	2000-CO-080	2	4001-AC-165	4001-AC-265	4001-AC-365	4001-CH-065	34
	4505-MC-085	**4505A-MC-085**	2000-CO-090	2	4001-AC-165	4001-AC-265	4001-AC-365	4001-CH-065	34
	4505-MC-090	**4505A-MC-090**	2000-CO-090	2	4001-AC-165	4001-AC-265	4001-AC-365	4001-CH-065	34
	4505-MC-100	**4505A-MC-100**	2000-CO-090	2	4001-AC-185	4001-AC-285	4001-AC-385	4001-CH-085	46
	4505-MC-110	**4505A-MC-110**	2000-CO-090	2	4001-AC-185	4001-AC-285	4001-AC-385	4001-CH-085	46

^Complete mandrel does not include cutting ring.

C: 68 - 87 C: 38 - 39 C: 60 - 65 C: 92

Key on C: 1

i = Imperial (in)
m = Metric (mm)

A DRILLING
B BORING
C REAMING
D BURNISHING
E THREADING
X SPECIALS

Ring Style Mandrels

4330 Series | Short Length | Diameter Range: 0.6929" - 3.9606" (17.600 mm - 100.599 mm)

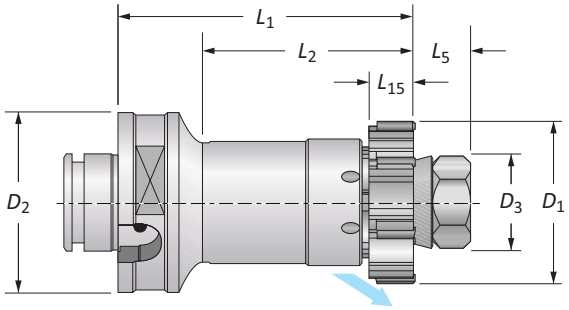

Series	4330	Shank Type	Modular	Application	Through Holes	Coolant	Radial

	D_1 Range		Mandrel					Shank		
	Imperial (inch)	Metric (mm)	D_3	L_5	L_{15}	L_2	L_1	D_2	Teeth	Part No. (Complete Mandrel^)
	0.6929 - 0.8504	17.600 - 21.599	12	11	11	55	75	50	6	**4330-MC-010***
	0.8505 - 1.0078	21.600 - 25.599	12	11	12	55	75	50	6	**4330-MC-020***
	1.0079 - 1.2834	25.600 - 32.599	15.6	11	14	60	80	50	6	**4330-MC-030***
	1.2835 - 1.5984	32.600 - 40.599	22	14	16	60	80	50	6	**4330-MC-040**
	1.5985 - 1.7952	40.600 - 45.599	25.4	15	16	60	80	50	6	**4330-MC-050**
ⓜ	1.7953 - 1.9527	45.600 - 49.599	30	20.5	18.5	60	80	50	6	**4330-MC-060**
	1.9528 - 2.3858	49.600 - 60.599	30	20.5	18.5	60	80	50	6	**4330-MC-070**
	2.3859 - 2.7795	60.600 - 70.599	40	24.5	18.5	65	90	63	6	**4330-MC-080**
	2.7796 - 3.1338	70.600 - 79.599	40	24.5	18.5	65	90	63	6	**4330-MC-090**
	3.1339 - 3.5669	79.600 - 90.599	56	28.5	18.5	65	90	63	8	**4330-MC-100**
	3.5670 - 3.9606	90.600 - 100.599	56	28.5	18.5	65	90	63	8	**4330-MC-110**

^Complete mandrel does not include cutting ring.
*0.6929" - 1.2834" (17.600 mm - 32.599 mm) diameter cutting rings are available as specials by contacting Application Engineering.

C: 68 - 87
Key on C: 1
C: 38 - 39
C: 60 - 65
C: 92

ⓘ = Imperial (in)
ⓜ = Metric (mm)

Ring Style Mandrels

4330 Series | Short Length | Spare Parts

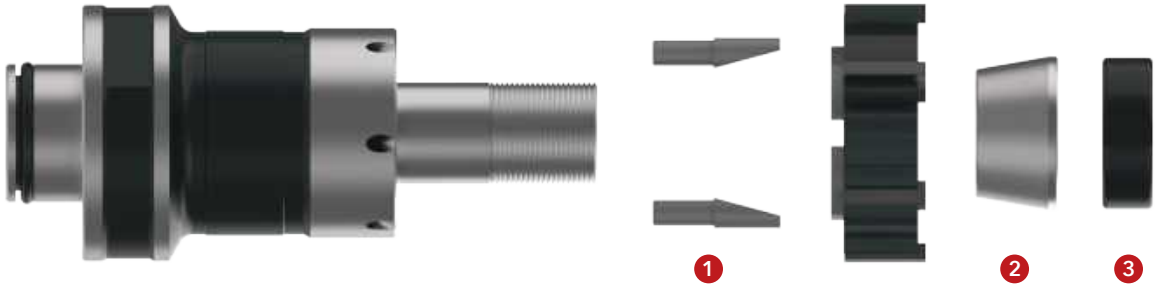

	Part No. (Complete Mandrel^)	Spare Parts 1 Drive Pins	Number of Drive Pins	2 Conical Ring	3 Nut	Wrench Size (mm)
	4330-MC-010	2000-CO-010	3	2010-AC-010	2000-DA-010	10
	4330-MC-020	2000-CO-020	3	2010-AC-010	2000-DA-010	10
	4330-MC-030	2000-CO-030	3	2010-AC-020	2000-DA-020	13
	4330-MC-040	2000-CO-040	2	2010-AC-030	2000-DA-060	19
	4330-MC-050	2000-CO-060	2	2010-AC-040	2000-DA-090	22
m	**4330-MC-060**	2000-CO-060	2	2010-AC-050	2000-GH-880	30 ◆
	4330-MC-070	2000-CO-070	2	2010-AC-050	2000-GH-880	30 ◆
	4330-MC-080	2000-CO-080	2	2010-AC-060	2000-GH-900	40 ◆
	4330-MC-090	2000-CO-090	2	2010-AC-060	2000-GH-900	40 ◆
	4330-MC-100	2000-CO-090	2	2010-AC-070	2000-GH-920	56 ◆
	4330-MC-110	2000-CO-090	2	2010-AC-070	2000-GH-920	56 ◆

^Complete mandrel does not include cutting ring.
◆ Spanner wrench.

C: 68 - 87
Key on C: 1
C: 38 - 39
C: 60 - 65
C: 92

i = Imperial (in)
m = Metric (mm)

A DRILLING
B BORING
C REAMING
D BURNISHING
E THREADING
X SPECIALS

Ring Style Mandrels

4335 Series | Short Length | Diameter Range: 0.6929" - 3.9606" (17.600 mm - 100.599 mm)

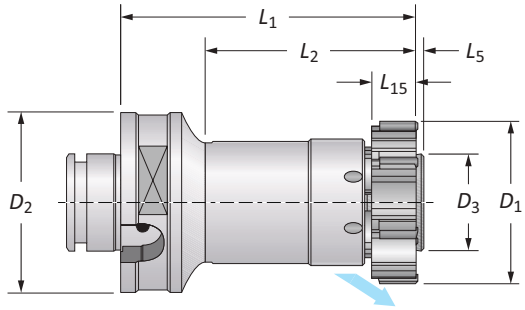

Series	4335	Shank Type	Modular	Application	Blind Holes	Coolant	Radial

	D_1 Range		Mandrel					Shank		
	Imperial (inch)	Metric (mm)	D_3	L_5	L_{15}	L_2	L_1	D_2	Teeth	Part No. (Complete Mandrel^)
	0.6929 - 0.8504	17.600 - 21.599	11.2	1	11	55	75	50	6	**4335-MC-010***
	0.8505 - 1.0078	21.600 - 25.599	11.2	1	12	55	75	50	6	**4335-MC-020***
	1.0079 - 1.1653	25.600 - 29.599	15.1	1	14	60	80	50	6	**4335-MC-030***
	1.1654 - 1.2834	29.600 - 32.599	15.1	1	14	60	80	50	6	**4335-MC-035***
	1.2835 - 1.4409	32.600 - 36.599	20.3	1	16	60	80	50	6	**4335-MC-040**
	1.4410 - 1.5984	36.600 - 40.599	20.3	1	16	60	80	50	6	**4335-MC-045**
	1.5985 - 1.7952	40.600 - 45.599	24.1	1	16	60	80	50	6	**4335-MC-050**
m	1.7953 - 1.9527	45.600 - 49.599	27.9	1.5	18.5	60	80	50	6	**4335-MC-060**
	1.9528 - 2.1889	49.600 - 55.599	27.9	1.5	18.5	60	80	50	6	**4335-MC-070**
	2.1890 - 2.3858	55.600 - 60.599	27.9	1.5	18.5	60	80	50	6	**4335-MC-075**
	2.3859 - 2.5826	60.600 - 65.599	37.1	1.5	18.5	65	90	63	6	**4335-MC-080**
	2.5827 - 2.7795	65.600 - 70.599	37.1	1.5	18.5	65	90	63	6	**4335-MC-085**
	2.7796 - 3.1338	70.600 - 79.599	37.1	1.5	18.5	65	90	63	6	**4335-MC-090**
	3.1339 - 3.5669	79.600 - 90.599	53.1	1.5	18.5	65	90	63	8	**4335-MC-100**
	3.5670 - 3.9606	90.600 - 100.599	53.1	1.5	18.5	65	90	63	8	**4335-MC-110**

^Complete mandrel does not include cutting ring.
*0.6929" - 1.2834" (17.600 mm - 32.599 mm) diameter cutting rings are available as specials by contacting Application Engineering.

C: 68 - 87
Key on C: 1
C: 38 - 39
C: 60 - 65
C: 92

i = Imperial (in)
m = Metric (mm)

Ring Style Mandrels

4335 Series | Short Length | Spare Parts

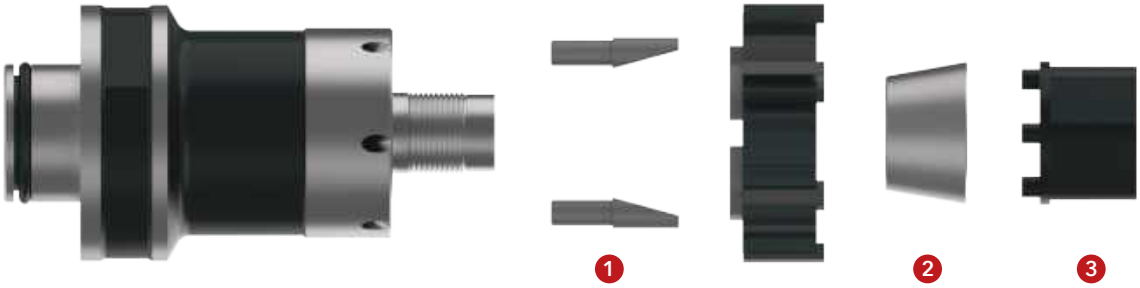

	Part No. (Complete Mandrel^)	Spare Parts 1: Drive Pins	1: Number of Drive Pins	2: Conical Ring	2: Conical Ring (2nd Expansion)	2: Conical Ring (3rd Expansion)	3: Adjusting Key	3: Wrench Size (mm)
	4335-MC-010	2000-CO-010	3	4001-AC-115	4001-AC-215	–	4001-CH-015	10
	4335-MC-020	2000-CO-020	3	4001-AC-115	4001-AC-215	–	4001-CH-015	10
	4335-MC-030	2000-CO-030	3	4001-AC-125	4001-AC-225	4001-AC-325	4001-CH-025	13
	4335-MC-035	2000-CO-040	2	4001-AC-125	4001-AC-225	4001-AC-325	4001-CH-025	13
	4335-MC-040	2000-CO-040	2	4001-AC-135	4001-AC-235	4001-AC-335	4001-CH-035	18
	4335-MC-045	2000-CO-050	2	4001-AC-135	4001-AC-235	4001-AC-335	4001-CH-035	18
	4335-MC-050	2000-CO-060	2	4001-AC-145	4001-AC-245	4001-AC-345	4001-CH-045	22
ⓜ	**4335-MC-060**	2000-CO-060	2	4001-AC-155	4001-AC-255	4001-AC-355	4001-CH-055	26
	4335-MC-070	2000-CO-070	2	4001-AC-155	4001-AC-255	4001-AC-355	4001-CH-055	26
	4335-MC-075	2000-CO-080	2	4001-AC-155	4001-AC-255	4001-AC-355	4001-CH-055	26
	4335-MC-080	2000-CO-080	2	4001-AC-165	4001-AC-265	4001-AC-365	4001-CH-065	34
	4335-MC-085	2000-CO-090	2	4001-AC-165	4001-AC-265	4001-AC-365	4001-CH-065	34
	4335-MC-090	2000-CO-090	2	4001-AC-165	4001-AC-265	4001-AC-365	4001-CH-065	34
	4335-MC-100	2000-CO-090	2	4001-AC-185	4001-AC-285	4001-AC-385	4001-CH-085	46
	4335-MC-110	2000-CO-090	2	4001-AC-185	4001-AC-285	4001-AC-385	4001-CH-085	46

^Complete mandrel does not include cutting ring.

C: 68 - 87
Key on C: 1
C: 38 - 39
C: 60 - 65
C: 92

ⓘ = Imperial (in)
ⓜ = Metric (mm)

Ring Style Mandrels

4350 Series | Standard Length | Diameter Range: 0.6929" - 7.8976" (17.600 mm - 200.600 mm)

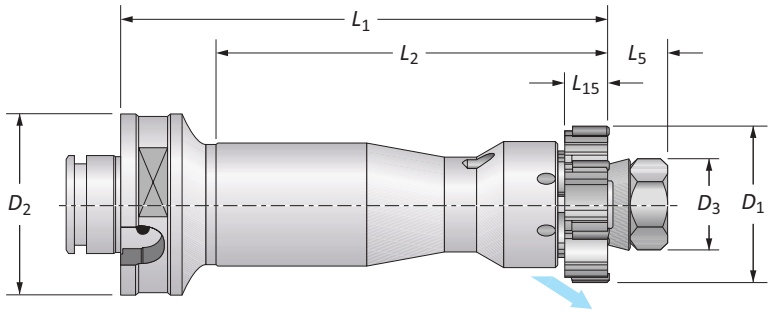

Series	4350	Shank Type	Modular	Application	Through Holes	Coolant	Radial

	D_1 Range		Mandrel					Shank		Part No.
	Imperial (inch)	Metric (mm)	D_3	L_5	L_{15}	L_2	L_1	D_2	Teeth	(Complete Mandrel^)
	0.6929 - 0.8504	17.600 - 21.599	12	11	11	81	116	50	6	**4350-MC-010***
	0.8505 - 1.0078	21.600 - 25.599	12	11	12	81	116	50	6	**4350-MC-020***
	1.0079 - 1.2834	25.600 - 32.599	15.6	11	14	102	137	50	6	**4350-MC-030***
	1.2835 - 1.5984	32.600 - 40.599	22	14	16	102	137	50	6	**4350-MC-040**
	1.5985 - 1.7952	40.600 - 45.599	25.4	15	16	102	137	50	6	**4350-MC-050**
m	1.7953 - 1.9527	45.600 - 49.599	30	20.5	18.5	105	140	50	6	**4350-MC-060**
	1.9528 - 2.3858	49.600 - 60.599	30	20.5	18.5	105	140	50	6	**4350-MC-070**
	2.3859 - 2.7795	60.600 - 70.599	40	24.5	18.5	105	140	63	6	**4350-MC-080**
	2.7796 - 3.1338	70.600 - 79.599	40	24.5	18.5	105	140	63	6	**4350-MC-090**
	3.1339 - 3.5669	79.600 - 90.599	56	28.5	18.5	105	140	63	8	**4350-MC-100**
	3.5670 - 3.9606	90.600 - 100.599	56	28.5	18.5	105	140	63	8	**4350-MC-110**

^Complete mandrel does not include cutting ring.
*0.6929" - 1.2834" (17.600 mm - 32.599 mm) diameter cutting rings are available as specials by contacting Application Engineering.

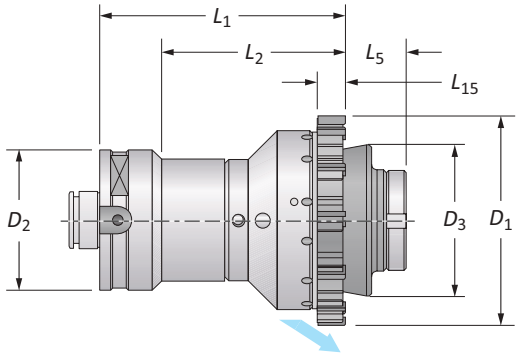

	D_1 Range		Mandrel					Shank		Part No.
	Imperial (inch)	Metric (mm)	D_3	L_5	L_{15}	L_2	L_1	D_2	Teeth	(Complete Mandrel^)
	3.9606 - 4.3543	100.600 - 110.599	73.8	35.5	18.5	–	140	80	10	**4350-MC-120**
	4.3544 - 4.5511	110.600 - 115.599	80.8	35.5	18.5	–	140	80	12	**4350-MC-130**
	4.5512 - 4.7480	115.600 - 120.599	86.8	35.5	18.5	–	140	80	12	**4350-MC-140**
	4.7481 - 4.9448	120.600 - 125.599	86.8	35.5	18.5	–	140	80	12	**4350-MC-150**
	4.9449 - 5.2204	125.600 - 132.599	90.8	35.5	18.5	–	140	80	12	**4350-MC-160**
	5.2205 - 5.4960	132.600 - 139.599	90.8	35.5	18.5	–	140	80	12	**4350-MC-170**
m	5.4961 - 5.7322	139.600 - 145.599	102.8	35.5	18.5	–	140	80	12	**4350-MC-180**
	5.7323 - 6.1259	145.600 - 155.599	107.8	35.5	18.5	–	140	80	12	**4350-MC-190**
	6.1260 - 6.5196	155.600 - 165.599	107.8	48.5	18.5	–	140	80	12	**4350-MC-200**
	6.5197 - 6.9133	165.600 - 175.599	117.8	48.5	18.5	–	140	80	12	**4350-MC-210**
	6.9134 - 7.3070	175.600 - 185.599	127.8	48.5	18.5	–	140	80	12	**4350-MC-220**
	7.3071 - 7.7007	185.600 - 195.599	137.8	48.5	18.5	–	140	80	12	**4350-MC-230**
	7.7008 - 7.8976	195.600 - 200.600	145.8	48.5	18.5	–	140	80	12	**4350-MC-240**

^Complete mandrel does not include cutting ring.

C: 68 - 87
Key on C: 1
C: 38 - 39
C: 60 - 65
C: 92

i = Imperial (in)
m = Metric (mm)

Ring Style Mandrels

4350 Series | Standard Length | Spare Parts

	Part No. (Complete Mandrel^)	Spare Parts 1 Drive Pins	1 Number of Drive Pins	2 Conical Ring	3 Nut	3 Wrench Size (mm)
	4350-MC-010	2000-CO-010	3	2010-AC-010	2000-DA-010	10
	4350-MC-020	2000-CO-020	3	2010-AC-010	2000-DA-010	10
	4350-MC-030	2000-CO-030	3	2010-AC-020	2000-DA-020	13
	4350-MC-040	2000-CO-040	2	2010-AC-030	2000-DA-060	19
	4350-MC-050	2000-CO-060	2	2010-AC-040	2000-DA-090	22
ⓜ	**4350-MC-060**	2000-CO-060	2	2010-AC-050	2000-GH-880	30 ◆
	4350-MC-070	2000-CO-070	2	2010-AC-050	2000-GH-880	30 ◆
	4350-MC-080	2000-CO-080	2	2010-AC-060	2000-GH-900	40 ◆
	4350-MC-090	2000-CO-090	2	2010-AC-060	2000-GH-900	40 ◆
	4350-MC-100	2000-CO-090	2	2010-AC-070	2000-GH-920	56 ◆
	4350-MC-110	2000-CO-090	2	2010-AC-070	2000-GH-920	56 ◆

^Complete mandrel does not include cutting ring.
◆ Spanner wrench.

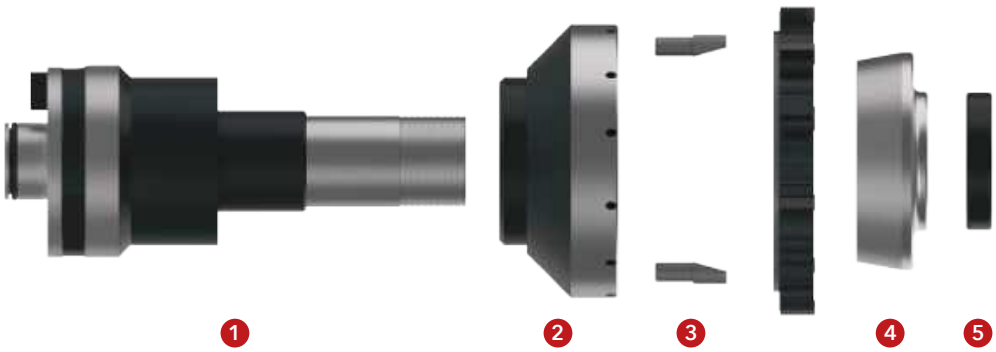

	Part No. (Complete Mandrel^)	Spare Parts 1 Mandrel	2 Flange	3 Drive Pins	3 Number of Drive Pins	4 Conical Ring	5 Nut	5 Wrench Size (mm)
	4350-MC-120	4350-MA-120	4355-FL-035	2000-CO-090	2	2060-BU-010	2000-GH-095	58 ◆
	4350-MC-130	4350-MA-120	4355-FL-045	2000-CO-090	2	2060-BU-020	2000-GH-095	58 ◆
	4350-MC-140	4350-MA-120	4355-FL-055	2000-CO-090	2	2060-BU-030	2000-GH-095	58 ◆
	4350-MC-150	4350-MA-120	4355-FL-065	2000-CO-090	2	2060-BU-030	2000-GH-095	58 ◆
	4350-MC-160	4350-MA-120	4355-FL-075	2000-CO-100	2	2060-BU-040	2000-GH-095	58 ◆
	4350-MC-170	4350-MA-120	4355-FL-085	2000-CO-100	2	2060-BU-040	2000-GH-095	58 ◆
ⓜ	**4350-MC-180**	4350-MA-120	4355-FL-095	2000-CO-100	2	2060-BU-050	2000-GH-095	58 ◆
	4350-MC-190	4350-MA-120	4355-FL-105	2000-CO-110	2	2060-BU-060	2000-GH-095	58 ◆
	4350-MC-200	4350-MA-200	4355-FL-115	2000-CO-110	2	2060-BU-070	2000-GH-120	90 ◆
	4350-MC-210	4350-MA-200	4355-FL-125	2000-CO-110	2	2060-BU-080	2000-GH-120	90 ◆
	4350-MC-220	4350-MA-200	4355-FL-135	2000-CO-120	2	2060-BU-090	2000-GH-120	90 ◆
	4350-MC-230	4350-MA-200	4355-FL-145	2000-CO-120	2	2060-BU-100	2000-GH-120	90 ◆
	4350-MC-240	4350-MA-200	4355-FL-155	2000-CO-120	2	2060-BU-110	2000-GH-120	90 ◆

^Complete mandrel does not include cutting ring.
◆ Spanner wrench.

ⓘ = Imperial (in)
ⓜ = Metric (mm)

A DRILLING
B BORING
C REAMING
D BURNISHING
E THREADING
X SPECIALS

Ring Style Mandrels

4355 Series | Standard Length | Diameter Range: 0.6929" - 7.8976" (17.600 mm - 200.600 mm)

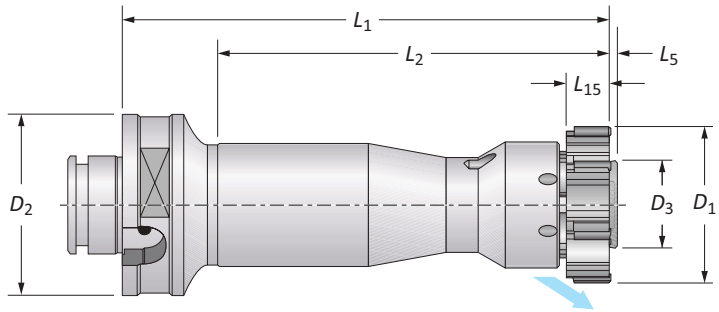

Series	4355	Shank Type	Modular	Application	Blind Holes	Coolant	Radial

	D_1 Range		Mandrel					Shank		Part No.
	Imperial (inch)	Metric (mm)	D_3	L_5	L_{15}	L_2	L_1	D_2	Teeth	(Complete Mandrel^)
	0.6929 - 0.8504	17.600 - 21.599	11.2	1	11	81	116	50	6	**4355-MC-010***
	0.8505 - 1.0078	21.600 - 25.599	11.2	1	12	81	116	50	6	**4355-MC-020***
	1.0079 - 1.1653	25.600 - 29.599	15.1	1	14	102	137	50	6	**4355-MC-030***
	1.1654 - 1.2834	29.600 - 32.599	15.1	1	14	102	137	50	6	**4355-MC-035***
	1.2835 - 1.4409	32.600 - 36.599	20.3	1	16	102	137	50	6	**4355-MC-040**
	1.4410 - 1.5984	36.600 - 40.599	20.3	1	16	102	137	50	6	**4355-MC-045**
	1.5985 - 1.7952	40.600 - 45.599	24.1	1	16	102	137	50	6	**4355-MC-050**
m	1.7953 - 1.9527	45.600 - 49.599	27.9	1.5	18.5	105	140	50	6	**4355-MC-060**
	1.9528 - 2.1889	49.600 - 55.599	27.9	1.5	18.5	105	140	50	6	**4355-MC-070**
	2.1890 - 2.3858	55.600 - 60.599	27.9	1.5	18.5	105	140	50	6	**4355-MC-075**
	2.3859 - 2.5826	60.600 - 65.599	37.1	1.5	18.5	105	140	63	6	**4355-MC-080**
	2.5827 - 2.7795	65.600 - 70.599	37.1	1.5	18.5	105	140	63	6	**4355-MC-085**
	2.7796 - 3.1338	70.600 - 79.599	37.1	1.5	18.5	105	140	63	6	**4355-MC-090**
	3.1339 - 3.5669	79.600 - 90.599	53.1	1.5	18.5	105	140	63	8	**4355-MC-100**
	3.5670 - 3.9606	90.600 - 100.599	53.1	1.5	18.5	105	140	63	8	**4355-MC-110**

^Complete mandrel does not include cutting ring.
*0.6929" - 1.2834" (17.600 mm - 32.599 mm) diameter cutting rings are available as specials by contacting Application Engineering.

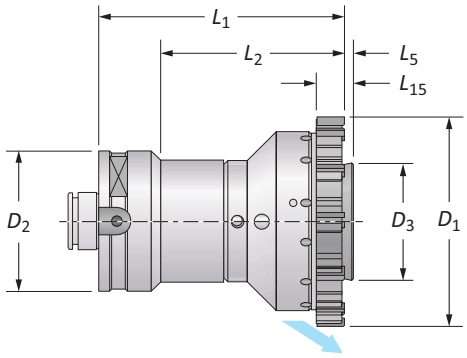

	D_1 Range		Mandrel					Shank		Part No.
	Imperial (inch)	Metric (mm)	D_3	L_5	L_{15}	L_2	L_1	D_2	Teeth	(Complete Mandrel^)
	3.9606 - 4.3543	100.600 - 110.599	70.3	1.5	18.5	–	140	80	10	**4355-MC-120**
	4.3544 - 4.5511	110.600 - 115.599	76.3	1.5	18.5	–	140	80	12	**4355-MC-130**
	4.5512 - 4.7480	115.600 - 120.599	83.3	1.5	18.5	–	140	80	12	**4355-MC-140**
	4.7481 - 4.9448	120.600 - 125.599	87.3	1.5	18.5	–	140	80	12	**4355-MC-150**
	4.9449 - 5.2204	125.600 - 132.599	87.3	1.5	18.5	–	140	80	12	**4355-MC-160**
	5.2205 - 5.4960	132.600 - 139.599	87.3	1.5	18.5	–	140	80	12	**4355-MC-170**
m	5.4961 - 5.7322	139.600 - 145.599	99.3	1.5	18.5	–	140	80	12	**4355-MC-180**
	5.7323 - 6.1259	145.600 - 155.599	104.3	1.5	18.5	–	140	80	12	**4355-MC-190**
	6.1260 - 6.5196	155.600 - 165.599	104.3	1.5	18.5	–	140	80	12	**4355-MC-200**
	6.5197 - 6.9133	165.600 - 175.599	114.3	1.5	18.5	–	140	80	12	**4355-MC-210**
	6.9134 - 7.3070	175.600 - 185.599	124.3	1.5	18.5	–	140	80	12	**4355-MC-220**
	7.3071 - 7.7007	185.600 - 195.599	134.3	1.5	18.5	–	140	80	12	**4355-MC-230**
	7.7008 - 7.8976	195.600 - 200.600	142.3	1.5	18.5	–	140	80	12	**4355-MC-240**

^Complete mandrel does not include cutting ring.

C: 68 - 87
Key on C: 1
C: 38 - 39
C: 60 - 65
C: 92

i = Imperial (in)
m = Metric (mm)

Ring Style Mandrels

4355 Series | Standard Length | Spare Parts

	Part No. (Complete Mandrel^)	Spare Parts 1 Drive Pins	1 Number of Drive Pins	1 Conical Ring	2 Conical Ring (2nd Expansion)	2 Conical Ring (3rd Expansion)	3 Adjusting Key	3 Wrench Size (mm)
	4355-MC-010	2000-CO-010	3	4001-AC-115	4001-AC-215	–	4001-CH-015	10
	4355-MC-020	2000-CO-020	3	4001-AC-115	4001-AC-215	–	4001-CH-015	10
	4355-MC-030	2000-CO-030	3	4001-AC-125	4001-AC-225	4001-AC-325	4001-CH-025	13
	4355-MC-035	2000-CO-040	2	4001-AC-125	4001-AC-225	4001-AC-325	4001-CH-025	13
	4355-MC-040	2000-CO-040	2	4001-AC-135	4001-AC-235	4001-AC-335	4001-CH-035	18
	4355-MC-045	2000-CO-050	2	4001-AC-135	4001-AC-235	4001-AC-335	4001-CH-035	18
	4355-MC-050	2000-CO-060	2	4001-AC-145	4001-AC-245	4001-AC-345	4001-CH-045	22
m	**4355-MC-060**	2000-CO-060	2	4001-AC-155	4001-AC-255	4001-AC-355	4001-CH-055	26
	4355-MC-070	2000-CO-070	2	4001-AC-155	4001-AC-255	4001-AC-355	4001-CH-055	26
	4355-MC-075	2000-CO-080	2	4001-AC-155	4001-AC-255	4001-AC-355	4001-CH-055	26
	4355-MC-080	2000-CO-080	2	4001-AC-165	4001-AC-265	4001-AC-365	4001-CH-065	34
	4355-MC-085	2000-CO-090	2	4001-AC-165	4001-AC-265	4001-AC-365	4001-CH-065	34
	4355-MC-090	2000-CO-090	2	4001-AC-165	4001-AC-265	4001-AC-365	4001-CH-065	34
	4355-MC-100	2000-CO-090	2	4001-AC-185	4001-AC-285	4001-AC-385	4001-CH-085	46
	4355-MC-110	2000-CO-090	2	4001-AC-185	4001-AC-285	4001-AC-385	4001-CH-085	46

^Complete mandrel does not include cutting ring.

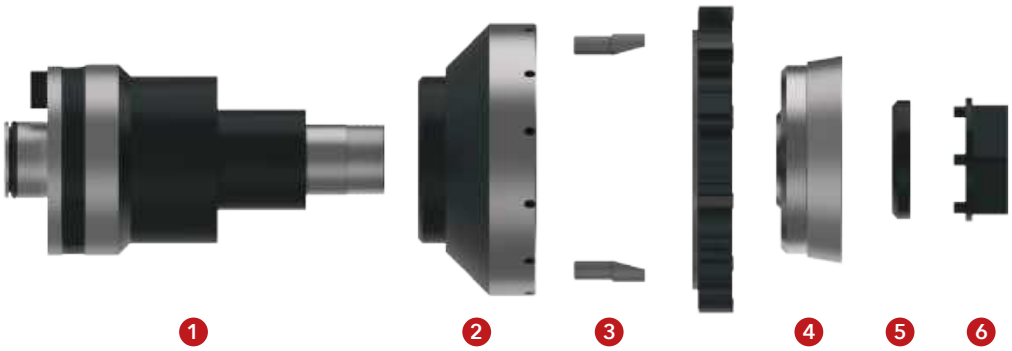

	Part No. (Complete Mandrel^)	Spare Parts 1 Mandrel	2 Flange	3 Drive Pins	3 Number of Drive Pins	4 Conical Ring	5 Nut	6 Adjusting Key	6 Wrench Size (mm)
	4355-MC-120	4355-MA-120	4355-FL-035	2000-CO-090	2	4001-AC-116	4001-GH-035	4001-CH-135	46
	4355-MC-130	4355-MA-120	4355-FL-045	2000-CO-090	2	4001-AC-126	4001-GH-035	4001-CH-135	46
	4355-MC-140	4355-MA-120	4355-FL-055	2000-CO-090	2	4001-AC-136	4001-GH-035	4001-CH-135	46
	4355-MC-150	4355-MA-120	4355-FL-065	2000-CO-090	2	4001-AC-136	4001-GH-035	4001-CH-135	46
	4355-MC-160	4355-MA-120	4355-FL-075	2000-CO-100	2	4001-AC-146	4001-GH-035	4001-CH-135	46
	4355-MC-170	4355-MA-120	4355-FL-085	2000-CO-100	2	4001-AC-146	4001-GH-035	4001-CH-135	46
m	**4355-MC-180**	4355-MA-120	4355-FL-095	2000-CO-100	2	4001-AC-156	4001-GH-035	4001-CH-135	46
	4355-MC-190	4355-MA-120	4355-FL-105	2000-CO-110	2	4001-AC-166	4001-GH-035	4001-CH-135	46
	4355-MC-200	4355-MA-200	4355-FL-115	2000-CO-110	2	4001-AC-176	4001-GH-115	4001-CH-115	46
	4355-MC-210	4355-MA-200	4355-FL-125	2000-CO-110	2	4001-AC-186	4001-GH-115	4001-CH-115	46
	4355-MC-220	4355-MA-200	4355-FL-135	2000-CO-120	2	4001-AC-196	4001-GH-115	4001-CH-115	46
	4355-MC-230	4355-MA-200	4355-FL-145	2000-CO-120	2	4001-AC-117	4001-GH-115	4001-CH-115	46
	4355-MC-240	4355-MA-200	4355-FL-155	2000-CO-120	2	4001-AC-127	4001-GH-115	4001-CH-115	46

^Complete mandrel does not include cutting ring.

i = Imperial (in)
m = Metric (mm)

A DRILLING
B BORING
C REAMING
D BURNISHING
E THREADING
X SPECIALS

Ring Style Mandrels

4300 Series | Long Length | Diameter Range: 0.6929" - 3.9606" (17.600 mm - 100.599 mm)

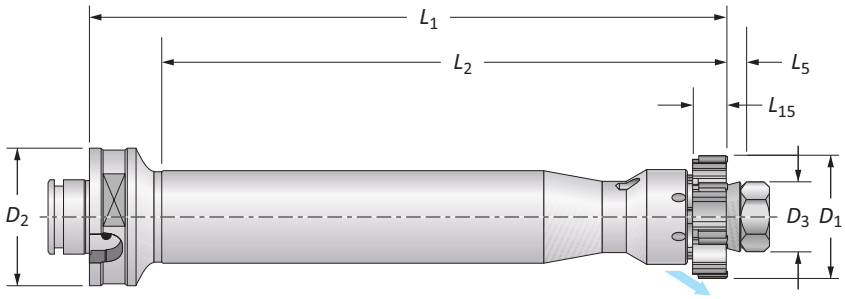

Series	4300	Shank Type	Modular	Application	Through Holes	Coolant	Radial

	D_1 Range		Mandrel							
	Imperial (inch)	Metric (mm)	D_3	L_5	L_{15}	L_2	L_1	D_2	Teeth	Part No. (Complete Mandrel^)
	0.6929 - 0.8504	17.600 - 21.599	12	11	11	121	156	50	6	**4300-MC-010***
	0.8505 - 1.0078	21.600 - 25.599	12	11	12	121	156	50	6	**4300-MC-020***
	1.0079 - 1.2834	25.600 - 32.599	15.6	11	14	153	188	50	6	**4300-MC-030***
	1.2835 - 1.5984	32.600 - 40.599	22	14	16	179	214	50	6	**4300-MC-040**
	1.5985 - 1.7952	40.600 - 45.599	25.4	15	16	201	236	50	6	**4300-MC-050**
m	1.7953 - 1.9527	45.600 - 49.599	30	20.5	18.5	214	249	50	6	**4300-MC-060**
	1.9528 - 2.3858	49.600 - 60.599	30	20.5	18.5	214	249	50	6	**4300-MC-070**
	2.3859 - 2.7795	60.600 - 70.599	40	24.5	18.5	237	272	63	6	**4300-MC-080**
	2.7796 - 3.1338	70.600 - 79.599	40	24.5	18.5	237	272	63	6	**4300-MC-090**
	3.1339 - 3.5669	79.600 - 90.599	56	28.5	18.5	245	280	63	8	**4300-MC-100**
	3.5670 - 3.9606	90.600 - 100.599	56	28.5	18.5	245	280	63	8	**4300-MC-110**

^Complete mandrel does not include cutting ring.
*0.6929" - 1.2834" (17.600 mm - 32.599 mm) diameter cutting rings are available as specials by contacting Application Engineering.

C: 68 - 87
Key on C: 1
C: 38 - 39
C: 60 - 65
C: 92

i = Imperial (in)
m = Metric (mm)

Ring Style Mandrels

4300 Series | Long Length | Spare Parts

	Part No. (Complete Mandrel^)	Spare Parts 1 Drive Pins	Number of Drive Pins	2 Conical Ring	3 Nut	Wrench Size (mm)
	4300-MC-010	2000-CO-010	3	2010-AC-010	2000-DA-010	10
	4300-MC-020	2000-CO-020	3	2010-AC-010	2000-DA-010	10
	4300-MC-030	2000-CO-030	3	2010-AC-020	2000-DA-020	13
	4300-MC-040	2000-CO-040	2	2010-AC-030	2000-DA-060	19
	4300-MC-050	2000-CO-060	2	2010-AC-040	2000-DA-090	22
m	**4300-MC-060**	2000-CO-060	2	2010-AC-050	2000-GH-880	30
	4300-MC-070	2000-CO-070	2	2010-AC-050	2000-GH-880	30
	4300-MC-080	2000-CO-080	2	2010-AC-060	2000-GH-900	40
	4300-MC-090	2000-CO-090	2	2010-AC-060	2000-GH-900	40
	4300-MC-100	2000-CO-090	2	2010-AC-070	2000-GH-920	56
	4300-MC-110	2000-CO-090	2	2010-AC-070	2000-GH-920	56

^Complete mandrel does not include cutting ring.

C: 68 - 87
Key on C: 1
C: 38 - 39
C: 60 - 65
C: 92

i = Imperial (in)
m = Metric (mm)

A DRILLING
B BORING
C REAMING
D BURNISHING
E THREADING
X SPECIALS

Ring Style Mandrels

4305 Series | Long Length | Diameter Range: 0.6929" - 3.9606" (17.600 mm - 100.599 mm)

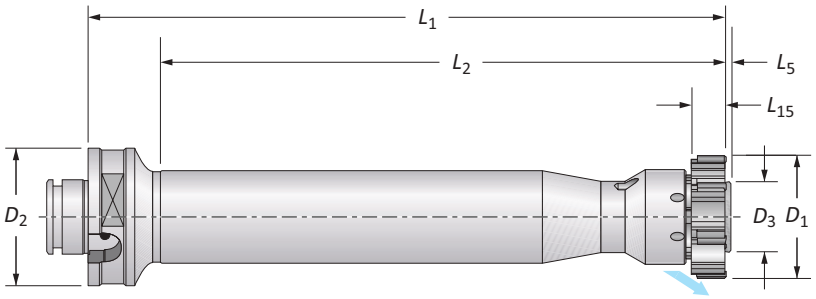

Series	4305	Shank Type	Modular	Application	Blind Holes	Coolant	Radial

	D_1 Range		Mandrel							
	Imperial (inch)	Metric (mm)	D_3	L_5	L_{15}	L_2	L_1	D_2	Teeth	Part No. (Complete Mandrel^)
	0.6929 - 0.8504	17.600 - 21.599	11.2	1	11	121	156	50	6	**4305-MC-010***
	0.8505 - 1.0078	21.600 - 25.599	11.2	1	12	121	156	50	6	**4305-MC-020***
	1.0079 - 1.1653	25.600 - 29.599	15.1	1	14	153	188	50	6	**4305-MC-030***
	1.1654 - 1.2834	29.600 - 32.599	15.1	1	14	153	188	50	6	**4305-MC-035***
	1.2835 - 1.4409	32.600 - 36.599	20.3	1	16	179	214	50	6	**4305-MC-040**
	1.4410 - 1.5984	36.600 - 40.599	20.3	1	16	179	214	50	6	**4305-MC-045**
	1.5985 - 1.7952	40.600 - 45.599	24.1	1	16	201	236	50	6	**4305-MC-050**
m	1.7953 - 1.9527	45.600 - 49.599	27.9	1.5	18.5	214	249	50	6	**4305-MC-060**
	1.9528 - 2.1889	49.600 - 55.599	27.9	1.5	18.5	214	249	50	6	**4305-MC-070**
	2.1890 - 2.3858	55.600 - 60.599	27.9	1.5	18.5	214	249	50	6	**4305-MC-075**
	2.3859 - 2.5826	60.600 - 65.599	37.1	1	18.5	237	272	63	6	**4305-MC-080**
	2.5827 - 2.7795	65.600 - 70.599	37.1	1	18.5	237	272	63	6	**4305-MC-085**
	2.7796 - 3.1338	70.600 - 79.599	37.1	1	18.5	237	272	63	6	**4305-MC-090**
	3.1339 - 3.5669	79.600 - 90.599	53.1	1.5	18.5	245	280	63	8	**4305-MC-100**
	3.5670 - 3.9606	90.600 - 100.599	53.1	1.5	18.5	245	280	63	8	**4305-MC-110**

^Complete mandrel does not include cutting ring.
*0.6929" - 1.2834" (17.600 mm - 32.599 mm) diameter cutting rings are available as specials by contacting Application Engineering.

C: 68 - 87
Key on C: 1
C: 38 - 39
C: 60 - 65
C: 92

i = Imperial (in)
m = Metric (mm)

Ring Style Mandrels

4305 Series | Long Length | Spare Parts

	Part No. (Complete Mandrel^)	Spare Parts 1: Drive Pins	1: Number of Drive Pins	2: Conical Ring	2: Conical Ring (2nd Expansion)	2: Conical Ring (3rd Expansion)	3: Adjusting Key	3: Wrench Size (mm)
	4305-MC-010	2000-CO-010	3	4001-AC-115	4001-AC-215	–	4001-CH-015	10
	4305-MC-020	2000-CO-020	3	4001-AC-115	4001-AC-215	–	4001-CH-015	10
	4305-MC-030	2000-CO-030	3	4001-AC-125	4001-AC-225	4001-AC-325	4001-CH-025	13
	4305-MC-035	2000-CO-040	2	4001-AC-125	4001-AC-225	4001-AC-325	4001-CH-025	13
	4305-MC-040	2000-CO-040	2	4001-AC-135	4001-AC-235	4001-AC-335	4001-CH-035	18
	4305-MC-045	2000-CO-050	2	4001-AC-135	4001-AC-235	4001-AC-335	4001-CH-035	18
	4305-MC-050	2000-CO-060	2	4001-AC-145	4001-AC-245	4001-AC-345	4001-CH-045	22
ⓜ	**4305-MC-060**	2000-CO-060	2	4001-AC-155	4001-AC-255	4001-AC-355	4001-CH-055	26
	4305-MC-070	2000-CO-070	2	4001-AC-155	4001-AC-255	4001-AC-355	4001-CH-055	26
	4305-MC-075	2000-CO-080	2	4001-AC-155	4001-AC-255	4001-AC-355	4001-CH-055	26
	4305-MC-080	2000-CO-080	2	4001-AC-165	4001-AC-265	4001-AC-365	4001-CH-065	34
	4305-MC-085	2000-CO-090	2	4001-AC-165	4001-AC-265	4001-AC-365	4001-CH-065	34
	4305-MC-090	2000-CO-090	2	4001-AC-165	4001-AC-265	4001-AC-365	4001-CH-065	34
	4305-MC-100	2000-CO-090	2	4001-AC-185	4001-AC-285	4001-AC-385	4001-CH-085	46
	4305-MC-110	2000-CO-090	2	4001-AC-185	4001-AC-285	4001-AC-385	4001-CH-085	46

^Complete mandrel does not include cutting ring.

C: 68 - 87 C: 38 - 39 C: 60 - 65 C: 92
Key on C: 1

ⓘ = Imperial (in)
ⓜ = Metric (mm)

Radial Adjusting Shanks

Large range of shanks for different machine types	Highly adjustable for improved concentricity	All shanks are available with through coolant

All the Pieces You Need

Modular System courtesy of Ceriu

DIN 69871/1 B and A

HSK-A DIN 69893/1

JMTBA MAS-403
BT B and BT

Straight

Collet Chuck Adapter

Cylindrical Shank Adapter

Radial Adjusting Shanks

Setup Information

Radial Adjusting Shanks and Ring Style Arbors

The following is a quick guide for setting up a radial adjusting shank and a ring style reamer. The ring reamer arbor does not contain the tang needed to connect to the shank. The tang must first be removed from the shank and then installed into the reamer arbor (demonstrated below).

Step 1:
The tang comes installed with the shank. Loosen the clamping screw on each side and remove the tang from the shank.

Step 2:
Thread the tang into the back end of the ring arbor. Use a bench vise and wrench to tighten.

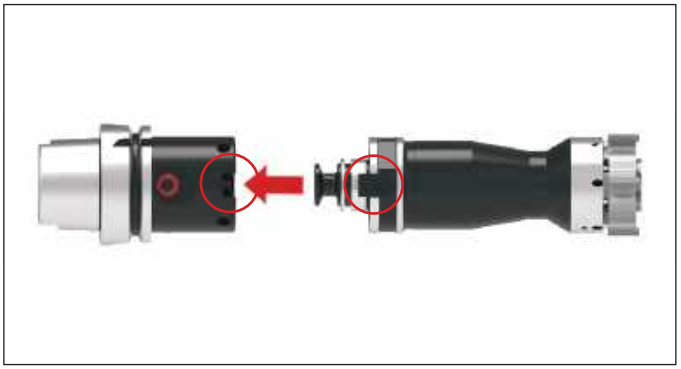

Step 3:
Assemble the ring arbor to the shank. With the clamping screws still loosened, align the key on the arbor to the keyway on the shank.

Step 4:
Once the ring arbor is connected with the shank, tighten the clamping screws to secure the tang back into place.

Radial Adjusting Shanks

DIN 69871/1 B and A

Maximum radial adjustment is ±0.008" (0.20 mm) on diameter.

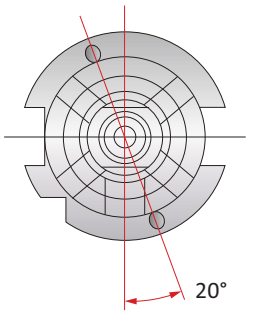

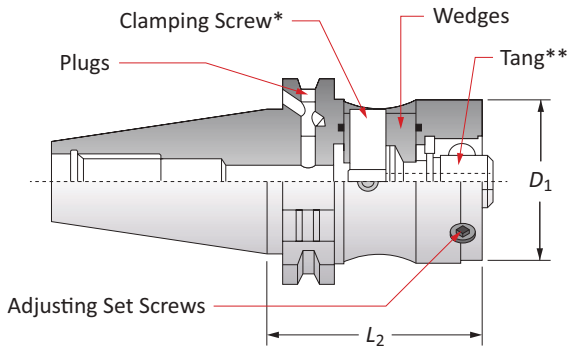

Shank					Spare Parts					
ISO Taper	D_1	L_2	Retention Knob Thread Size	Part No.	Wedges + O-Ring	Clamping Screw*	Adjusting Set Screws	Plugs	Replacement Tang**	Clamping Screw Key
40	50	65	M16 x 2	**02B.40.50L.65**	ATR14102.2.3	ATR14102.1	M8x1x10G	M5x5TG	ATT14103	6 mm
40	63	85	M16 x 2	**02B.40.63L.85**	ATR14108.2.3	ATR14108.1	M8x1x14G	M5x5TG	ATT14104	6 mm
45	50	70	M20 x 2.5	**02B.45.50L.70**	ATR14102.2.3	ATR14102.1	M8x1x10G	M5x5TG	ATT14103	6 mm
45	63	70	M20 x 2.5	**02B.45.63L.70**	ATR14108.2.3	ATR14108.1	M8x1x14G	M5x5TG	ATT14104	6 mm
50	50	70	M24 x 3	**02B.50.50L.70**	ATR14102.2.3	ATR14102.1	M8x1x10G	M5x5TG	ATT14103	6 mm
50	63	70	M24 x 3	**02B.50.63L.70**	ATR14108.2.3	ATR14108.1	M8x1x14G	M5x5TG	ATT14104	6 mm
50	80	70	M24 x 3	❖ **02B.50.80L.70**	ATR18775.2.3	ATR18775.1	M8x1x20G	M5x5TG	ATT14104	6 mm

* Light torque exerted on the clamping screw transmits high axial forces, which provide stiffness and extreme accuracy to the assembly.
** Tang must be fitted to all reamer arbors and adapters prior to assembly.
❖ Could cause interference with tool changer mechanism.
NOTE: Shanks can be converted into DIN 69871/1A coolant by screwing the two plugs clockwise to the end of their stroke.

C: 60
Key on C: 1

Modular System courtesy of Ccerit

Reference Key

Symbol	Attribute
D_1	Modular shank size
L_2	Gage length

Radial Adjusting Shanks

JMTBA MAS-403 BT B and BT

Maximum radial adjustment is ±0.008" (0.20 mm) on diameter.

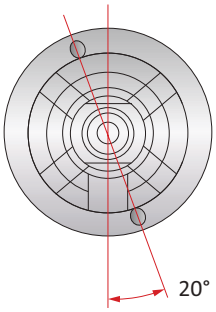

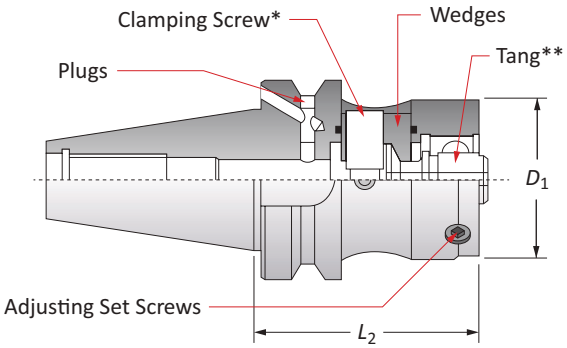

Shank					Spare Parts					
BT Taper	D_1	L_2	Retention Knob Thread Size	Part No.	Wedges + O-ring	Clamping Screw*	Adjusting Set Screws	Plugs	Replacement Tang**	Clamping Screw Key
40	50	70	M16 x 2	**BTB.40.50L.70**	ATR14102.2.3	ATR14102.1	M8x1x10G	M5x5TG	ATT14103	6 mm
40	63	80	M16 x 2	**BTB.40.63L.80**	ATR14108.2.3	ATR14108.1	M8x1x14G	M5x5TG	ATT14104	6 mm
50	50	90	M24 x 3	**BTB.50.50L.90**	ATR14102.2.3	ATR14102.1	M8x1x10G	M5x5TG	ATT14103	6 mm
50	63	90	M24 x 3	**BTB.50.63L.90**	ATR14108.2.3	ATR14108.1	M8x1x14G	M5x5TG	ATT14104	6 mm
50	80	90	M24 x 3	**BTB.50.80L.90**	ATR18775.2.3	ATR18775.1	M8x1x20G	M5x5TG	ATT14104	6 mm

* Light torque exerted on the clamping screw transmits high axial forces, which provide stiffness and extreme accuracy to the assembly.
** Tang must be fitted to all ring arbors and adapters prior to assembly.
NOTE: Shanks can be converted into MAS-403 BT coolant by screwing the two plugs clockwise to the end of their stroke.

C: 60
Key on C: 1

Modular System courtesy of Cerit

Reference Key

Symbol	Attribute
D_1	Modular shank size
L_2	Gage length

Radial Adjusting Shanks

HSK-A DIN 69893/1

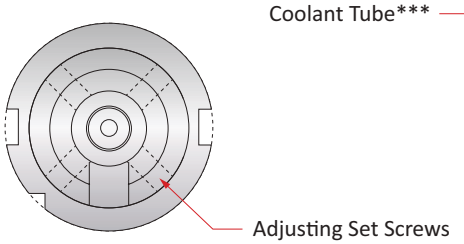

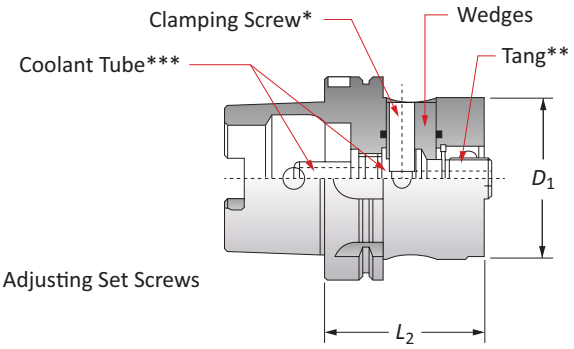

Shank				Spare Parts						
HSK	D_1	L_2	Part No.	Wedges + O-Ring	Clamping Screw*	Adjusting Set Screws	Replacement Tang**	Clamping Screw Key	Coolant Tube Key	Coolant Tube***
63	50	70	**HSKA.63.50L.70**	ATR14102.2.3	ATR14102.1	M8x1x10G	ATT14103	6 mm	ATR23856	ATT23728
63	63	75	**HSKA.63.63L.75**	ATR.41613.4	ATR14108.1	M8x1x14G	ATT14104	6 mm	ATR23856	ATT23728
100	50	80	**HSKA.100.50L.80**	ATR14102.2.3	ATR14102.1	M8x1x10G	ATT14103	6 mm	ATR23856	ATT23656
100	63	80	**HSKA.100.63L.80**	ATR14108.2.3	ATR14108.1	M8x1x14G	ATT14104	6 mm	ATR23856	ATT23656
100	80	80	**HSKA.100.80L.80**	ATR18775.2.3	ATR18775.1	M8x1x20G	ATT14104	6 mm	ATR23856	ATT23656

* Light torque exerted on the clamping screw transmits high axial forces, which provide stiffness and extreme accuracy to the assembly.
** Tang must be fitted to all ring arbors and adapters prior to assembly.
*** Coolant tube sold separately.

C: 60
Key on C: 1

Modular System courtesy of Ccerit

Reference Key

Symbol	Attribute
D_1	Modular shank size
L_2	Gage length

Radial Adjusting Shanks

Straight

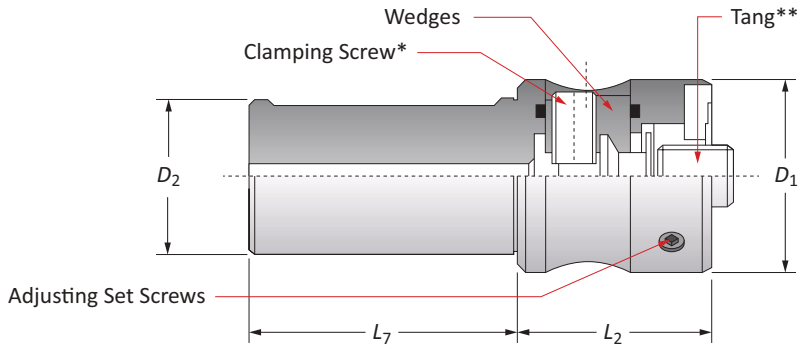

Shank					Spare Parts				
D_1	D_2	L_2	L_7	Part No.	Wedges + O-Ring	Clamping Screw*	Adjusting Set Screws	Replacement Tang**	Clamping Screw Key
50	25	50	70	**CIL.25.50.50**	ATR14102.2.3	ATR14102.1	M8x1x10G	ATT14103	6 mm
50	32	50	70	**CIL.32.50.50**	ATR14102.2.3	ATR14102.1	M8x1x10G	ATT14103	6 mm
50	40	50	70	**CIL.40.50.50**	ATR14102.2.3	ATR14102.1	M8x1x10G	ATT14103	6 mm

* Light torque exerted on the clamping screw transmits high axial forces, which provide stiffness and extreme accuracy to the assembly.
** Tang must be fitted to all ring arbors and adapters prior to assembly.

C: 60
Key on C: 1

Modular System courtesy of Cerit

Reference Key

Symbol	Attribute
D_1	Modular shank size
D_2	Shank diameter
L_2	Gage length
L_7	Shank length

Radial Adjusting Adapters

Collet Chuck Adapters

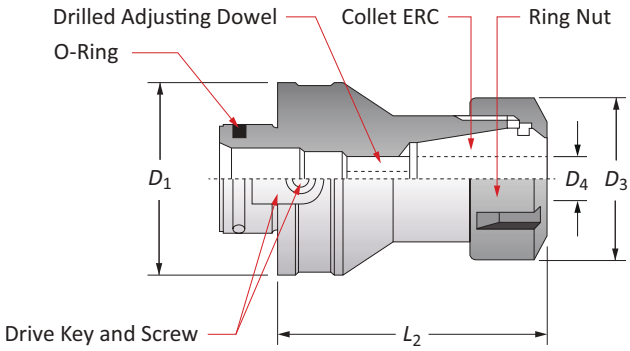

Adapter						Spare Parts					
Collet Sleeve Size*	D_1	D_3	D_4	L_2	Part No.	Clamping Screw	Ring Nut	Adjusting Dowel	Drive Key	Ring Nut Wrench	Adjusting Dowel Key
ERC25	50	42	0.5 - 16 mm	70	**30.50R.25.70**	M4x8V	G25S	M12x16GF	TAB3924	CH25S	6 mm
ERC32	50	50	1 - 20 mm	70	**30.50R.32.70**	M4x8V	G32S	M16x15x18GF	TAB3924	CH32S	8 mm
ERC32	63	50	1 - 20 mm	90	**30.63R.32.90**	M6x12V	G32S	M12x16GF	TAB3923.1	CH32S	6 mm
ERC40	63	63	2 - 30 mm	90	**30.63R.40.90**	M6x12V	G40S	M20x2x20GF	TAB3923.1	CH40S	10 mm
ERC32	80	50	1 - 20 mm	90	**30.80R.32.90**	M6x16V	G32S	M12x16GF	TAB3923.2	CH32S	6 mm
ERC40	80	63	2 - 30 mm	90	**30.80R.40.90**	M6x16V	G40S	M20x2x20GF	TAB3923.2	CH40S	10 mm

*Collet sleeve not included

Reference Key

Symbol	Attribute
D_1	Modular shank size
D_3	Body diameter
D_4	Shank diameter
L_2	Gage length

C: 60
Key on C: 1

Modular System courtesy of cerit

Radial Adjusting Adapters

Cylindrical Shank Adapters

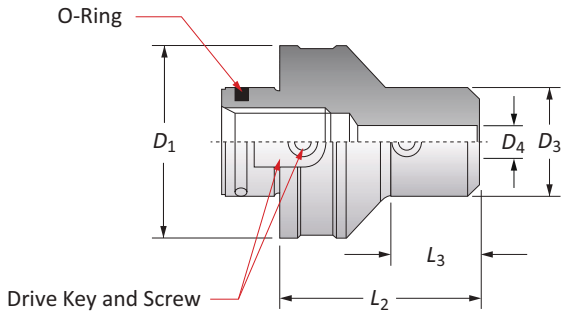

Adapter						Spare Parts			
D_1	D_4	D_3	L_2	L_3	Part No.	Drive Key	Screw	Set Screw	Set Screw Key
50	6	25	50	22.5	**35.50R.06.50**	TAB3924	M4x8V	M6x8G	3 mm
50	8	28	50	24.5	**35.50R.08.50**	TAB3924	M4x8V	M8x8G	4 mm
50	10	35	50	26.5	**35.50R.10.50**	TAB3924	M4x8V	M10x10G	5 mm
50	12	42	60	38.5	**35.50R.12.60**	TAB3924	M4x8V	M12x12G	6 mm
50	14	44	60	42	**35.50R.14.60**	TAB3924	M4x8V	M12x12G	6 mm
50	16	48	60	40	**35.50R.16.60**	TAB3924	M4x8V	M14x14G	6 mm
50	18	50	60	–	**35.50R.18.60**	TAB3924	M4x8V	M14x14G	6 mm
50	20	52	60	41	**35.50R.20.60**	TAB3924	M4x8V	M16x2x14G	8 mm
63	8	28	60	28	**35.63R.08.60**	TAB3923.1	M6x12V	M8x8G	4 mm
63	10	35	70	40	**35.63R.10.70**	TAB3923.1	M6x12V	M10x10G	5 mm
63	12	42	70	42	**35.63R.12.70**	TAB3923.1	M6x12V	M12x12G	6 mm
63	14	44	60	32	**35.63R.14.60**	TAB3923.1	M6x12V	M12x12G	6 mm
63	16	48	70	44	**35.63R.16.70**	TAB3923.1	M6x12V	M14x14G	6 mm
63	18	50	70	40	**35.63R.18.70**	TAB3923.1	M6x12V	M14x14G	6 mm
63	20	52	70	45	**35.63R.20.70**	TAB3923.1	M6x12V	M16x2x14G	8 mm
50	25	65	80	61	**40.50R.25.80**	TAB3924	M4x8V	M18x2x18G	8 mm
50	32	72	80	65	**40.50R.32.80**	TAB3924	M4x8V	M20x2x18G	10 mm
63	25	65	80	58	**40.63R.25.80**	TAB3923.1	M6x12V	M18x2x18G	8 mm
63	32	72	80	–	**40.63R.32.80**	TAB3923.1	M6x12V	M20x2x18G	10 mm
80	25	65	80	50.5	**40.80R.25.80**	TAB3923.2	M6x12V	M18x2x18G	8 mm
80	32	72	80	54	**40.80R.32.80**	TAB3923.2	M6x12V	M20x2x18G	10 mm

Reference Key

Symbol	Attribute
D_1	Modular shank size
D_3	Body diameter
D_4	Shank diameter
L_2	Gage length
L_3	Reference length

C: 60
Key on C: 1

Modular System courtesy of Cerit

Recommended Cutting Data | Imperial (inch)

Replaceable Head Style | 7000 Series

ISO	Material	Hardness (BHN)	Speed (SFM) Uncoated Carbide	Speed (SFM) Coated Carbide	Speed (SFM) Cermet	Recommended Feed (IPR) by Reamer Diameter 0.4646" - 0.8504" Lead A, G	0.4646" - 0.8504" Lead E, N, M	0.8505" - 1.5590" Lead A, G	0.8505" - 1.5590" Lead E, N, M	1.5591" - 3.1732" Lead A, G	1.5591" - 3.1732" Lead E, N, M
P	**Free-Machining Steel**	100 - 180	33 - 66	197 - 262	295 - 984	0.010 - 0.024	0.020 - 0.039	0.012 - 0.031	0.024 - 0.047	0.024 - 0.039	0.028 - 0.059
	1118, 1215, 12L14, etc.	180 - 250	23 - 49	131 - 230	262 - 656	0.012 - 0.024	0.016 - 0.031	0.016 - 0.031	0.020 - 0.039	0.020 - 0.035	0.024 - 0.047
	Low-Carbon Steel	85 - 180	33 - 66	197 - 262	295 - 984	0.010 - 0.024	0.020 - 0.039	0.012 - 0.031	0.024 - 0.047	0.024 - 0.039	0.028 - 0.059
	1010, 1020, 1025, 1522, 1144, etc.	180 - 275	23 - 49	131 - 230	262 - 656	0.012 - 0.024	0.016 - 0.031	0.016 - 0.031	0.020 - 0.039	0.020 - 0.035	0.024 - 0.047
	Medium-Carbon Steel	125 - 180	33 - 66	197 - 262	295 - 984	0.010 - 0.024	0.020 - 0.039	0.012 - 0.031	0.024 - 0.047	0.024 - 0.039	0.028 - 0.059
	1030, 1040, 1050, 1527, 1140, 1151, etc.	180 - 325	23 - 49	131 - 230	262 - 656	0.012 - 0.024	0.016 - 0.031	0.016 - 0.031	0.020 - 0.039	0.020 - 0.035	0.024 - 0.047
	Alloy Steel	125 - 180	20 - 33	131 - 197	164 - 197	0.012 - 0.024	0.016 - 0.031	0.016 - 0.031	0.020 - 0.039	0.020 - 0.035	0.024 - 0.047
	4140, 5140, 8640, etc.	180 - 375	13 - 26	131 - 164	197 - 394	0.010 - 0.020	0.012 - 0.024	0.012 - 0.024	0.016 - 0.031	0.016 - 0.028	0.020 - 0.039
	High-Strength Alloy 4340, 4330V, 300M, etc.	240 - 450	13 - 26	131 - 164	197 - 394	0.010 - 0.020	0.012 - 0.024	0.012 - 0.024	0.016 - 0.031	0.016 - 0.028	0.020 - 0.039
	Structural Steel	125 - 180	33 - 66	197 - 262	295 - 984	0.010 - 0.024	0.020 - 0.039	0.012 - 0.031	0.024 - 0.047	0.024 - 0.039	0.028 - 0.059
	A36, A285, A516	180 - 350	23 - 49	131 - 230	262 - 656	0.012 - 0.024	0.016 - 0.031	0.016 - 0.031	0.020 - 0.039	0.020 - 0.035	0.024 - 0.047
	Tool Steel	150 - 200	33 - 66	197 - 262	295 - 984	0.010 - 0.024	0.020 - 0.039	0.012 - 0.031	0.024 - 0.047	0.024 - 0.039	0.028 - 0.059
	H-13, H-21, A-4, 0-2, S-3, etc.	200 - 250	23 - 49	131 - 230	262 - 656	0.012 - 0.024	0.016 - 0.031	0.016 - 0.031	0.020 - 0.039	0.020 - 0.035	0.024 - 0.047
S	**High-Temp Alloy** Hastelloy B, Inconel 600, etc.	140 - 310	13 - 33	98 - 164	–	0.008 - 0.016	–	0.012 - 0.020	–	0.016 - 0.024	–
	Titanium Alloy	140 - 310	13 - 49	98 - 164	–	0.008 - 0.016	–	0.012 - 0.020	–	0.016 - 0.024	–
M	**Stainless Steel 400 Series** 416, 420, etc.	135 - 350	20 - 33	131 - 197	164 - 197	0.012 - 0.024	0.016 - 0.031	0.016 - 0.031	0.020 - 0.039	0.020 - 0.035	0.024 - 0.047
	Stainless Steel 300 Series 304, 316, 17-4PH, etc.	135 - 275	20 - 33	131 - 197	164 - 197	0.012 - 0.024	0.016 - 0.031	0.016 - 0.031	0.020 - 0.039	0.020 - 0.035	0.024 - 0.047
K	**Grey Cast Iron, Ductile Cast Iron,**	< 200	66 - 131	394 - 656	–	0.008 - 0.024	0.020 - 0.039	0.012 - 0.028	0.024 - 0.047	0.016 - 0.031	0.031 - 0.063
	Spheroidal Cast Iron (Pearlitic)	> 200	49 - 98	394 - 656	–	0.008 - 0.024	0.020 - 0.039	0.012 - 0.028	0.024 - 0.047	0.016 - 0.031	0.031 - 0.063
	Spheroidal Cast Iron (Ferritic)	260 - 320	33 - 49	-	295 - 459	0.008 - 0.024	0.020 - 0.024	0.012 - 0.028	0.024 - 0.047	0.016 - 0.031	0.031 - 0.063
N	**Copper and Alloys Brass**	< 500	197 - 656	328 - 656	–	0.008 - 0.016	–	0.012 - 0.024	–	0.016 - 0.031	–
	Bronze Bronze Phosphorous	< 180	66 - 131	262 - 525	328 - 984	0.012 - 0.024	0.016 - 0.039	0.012 - 0.024	0.020 - 0.047	0.012 - 0.024	0.024 - 0.059
	Aluminum and Alloys	< 150	66 - 328	–	–	0.012 - 0.024	–	0.016 - 0.039	–	0.016 - 0.039	–

Formulas

1. **RPM = (SFM • 3.82) / DIA**

where:

RPM = revolutions per minute (rev/min)
SFM = speed (ft/min)
DIA = diameter of reamer (inch)

2. **IPM = RPM • IPR**

where:

IPM = inches per minute (in/min)
RPM = revolutions per minute (rev/min)
IPR = feed rate (in/rev)

3. **SFM = RPM • 0.262 • DIA**

where:

SFM = speed (ft/min)
RPM = revolutions per minute (rev/min)
DIA = diameter of reamer (inch)

IMPORTANT: The speeds and feeds listed on these pages are a general starting point for all applications. Factory technical assistance is also available for specific applications through our Application Engineering department. *ext:* **7611** | *email:* **appeng@alliedmachine.com**

Stock Allowance and Coolant | Imperial (inch)

Replaceable Head Style | 7000 Series

ISO	Material	Hardness (BHN)	Coolant	Recommended Stock (inch) by Reamer Diameter* 0.4646" - 0.8504"	0.8505" - 1.5590"	1.5591" - 3.1732"
P	**Free-Machining Steel**	100 - 180	Water Soluble / Cutting Oil	0.006 - 0.010	0.008 - 0.016	0.012 - 0.016
	1118, 1215, 12L14, etc.	180 - 250				
	Low-Carbon Steel	85 - 180				
	1010, 1020, 1025, 1522, 1144, etc.	180 - 275				
	Medium-Carbon Steel	125 - 180				
	1030, 1040, 1050, 1527, 1140, 1151, etc.	180 - 325				
	Alloy Steel	125 - 180				
	4140, 5140, 8640, etc.	180 - 375				
	High-Strength Alloy 4340, 4330V, 300M, etc.	240 - 450				
	Structural Steel	125 - 180				
	A36, A285, A516	180 - 350				
	Tool Steel	150 - 200				
	H-13, H-21, A-4, 0-2, S-3, etc.	200 - 250				
S	**High-Temp Alloy** Hastelloy B, Inconel 600, etc.	140 - 310	Water Soluble / Cutting Oil	0.006 - 0.010	0.008 - 0.016	0.012 - 0.016
	Titanium Alloy	140 - 310				
M	**Stainless Steel 400 Series** 416, 420, etc.	135 - 350	Water Soluble / Cutting Oil	0.006 - 0.010	0.008 - 0.016	0.012 - 0.016
	Stainless Steel 300 Series 304, 316, 17-4PH, etc.	135 - 275				
K	**Grey Cast Iron, Ductile Cast Iron,**	< 200	Water Soluble / Cutting Oil	0.006 - 0.010	0.008 - 0.016	0.012 - 0.016
	Spheroidal Cast Iron (Pearlitic)	> 200				
	Spheroidal Cast Iron (Ferritic)	260 - 320				
N	**Copper and Alloys Brass**	< 500	Water Soluble	0.006 - 0.010	0.008 - 0.016	0.012 - 0.016
	Bronze Bronze Phosphorous	< 180	Water Soluble / Cutting Oil			
	Aluminum and Alloys	< 150	Water Soluble / Cutting Oil			

*Stock value is on diameter.

IMPORTANT: The speeds and feeds listed on these pages are a general starting point for all applications. Factory technical assistance is also available for specific applications through our Application Engineering department. *ext:* **7611** | *email:* **appeng@alliedmachine.com**

Recommended Cutting Data | Imperial (inch)

Replaceable Head Style | 9000 Series

ISO	Material	Hardness (BHN)	Speed (SFM) Uncoated Carbide	Speed (SFM) Coated Carbide	Speed (SFM) Cermet	Recommended Feed (IPR) by Reamer Diameter 0.4646" - 0.8504" Lead A, G	0.4646" - 0.8504" Lead E, N, M	0.8505" - 1.5590" Lead A, G	0.8505" - 1.5590" Lead E, N, M	1.5591" - 1.5984" Lead A, G	1.5591" - 1.5984" Lead E, N, M
P	**Free-Machining Steel**	100 - 180	33 - 66	197 - 262	295 - 984	0.010 - 0.024	0.020 - 0.039	0.012 - 0.031	0.024 - 0.047	0.024 - 0.039	0.028 - 0.059
	1118, 1215, 12L14, etc.	180 - 250	23 - 49	131 - 230	262 - 656	0.012 - 0.024	0.016 - 0.031	0.016 - 0.031	0.020 - 0.039	0.020 - 0.035	0.024 - 0.047
	Low-Carbon Steel	85 - 180	33 - 66	197 - 262	295 - 984	0.010 - 0.024	0.020 - 0.039	0.012 - 0.031	0.024 - 0.047	0.024 - 0.039	0.028 - 0.059
	1010, 1020, 1025, 1522, 1144, etc.	180 - 275	23 - 49	131 - 230	262 - 656	0.012 - 0.024	0.016 - 0.031	0.016 - 0.031	0.020 - 0.039	0.020 - 0.035	0.024 - 0.047
	Medium-Carbon Steel	125 - 180	33 - 66	197 - 262	295 - 984	0.010 - 0.024	0.020 - 0.039	0.012 - 0.031	0.024 - 0.047	0.024 - 0.039	0.028 - 0.059
	1030, 1040, 1050, 1527, 1140, 1151, etc.	180 - 325	23 - 49	131 - 230	262 - 656	0.012 - 0.024	0.016 - 0.031	0.016 - 0.031	0.020 - 0.039	0.020 - 0.035	0.024 - 0.047
	Alloy Steel	125 - 180	20 - 33	131 - 197	164 - 197	0.012 - 0.024	0.016 - 0.031	0.016 - 0.031	0.020 - 0.039	0.020 - 0.035	0.024 - 0.047
	4140, 5140, 8640, etc.	180 - 375	13 - 26	197 - 394	-	0.010 - 0.020	0.012 - 0.024	0.012 - 0.024	0.016 - 0.031	0.016 - 0.028	0.020 - 0.039
	High-Strength Alloy 4340, 4330V, 300M, etc.	240 - 450	13 - 26	197 - 394	-	0.010 - 0.020	0.012 - 0.024	0.012 - 0.024	0.016 - 0.031	0.016 - 0.028	0.020 - 0.039
	Structural Steel	125 - 180	33 - 66	197 - 262	295 - 984	0.010 - 0.024	0.020 - 0.039	0.012 - 0.031	0.024 - 0.047	0.024 - 0.039	0.028 - 0.059
	A36, A285, A516	180 - 350	23 - 49	131 - 230	262 - 656	0.012 - 0.024	0.016 - 0.031	0.016 - 0.031	0.020 - 0.039	0.020 - 0.035	0.024 - 0.047
	Tool Steel	150 - 200	33 - 66	197 - 262	295 - 984	0.010 - 0.024	0.020 - 0.039	0.012 - 0.031	0.024 - 0.047	0.024 - 0.039	0.028 - 0.059
	H-13, H-21, A-4, 0-2, S-3, etc.	200 - 250	23 - 49	131 - 230	262 - 656	0.012 - 0.024	0.016 - 0.031	0.016 - 0.031	0.020 - 0.039	0.020 - 0.035	0.024 - 0.047
S	**High-Temp Alloy** Hastelloy B, Inconel 600, etc.	140 - 310	20 - 33	49 - 98	–	0.008 - 0.016	–	0.012 - 0.020	–	0.016 - 0.024	–
	Titanium Alloy	140 - 310	20 - 33	49 - 98	–	0.008 - 0.016	–	0.012 - 0.020	–	0.016 - 0.024	–
M	**Stainless Steel 400 Series** 416, 420, etc.	135 - 350	20 - 33	131 - 197	164 - 197	0.012 - 0.024	0.016 - 0.031	0.016 - 0.031	0.020 - 0.039	0.020 - 0.035	0.024 - 0.047
	Stainless Steel 300 Series 304, 316, 17-4PH, etc.	135 - 275	20 - 33	131 - 197	164 - 197	0.012 - 0.024	0.016 - 0.031	0.016 - 0.031	0.020 - 0.039	0.020 - 0.035	0.024 - 0.047
K	**Grey Cast Iron, Ductile Cast Iron,**	< 200	66 - 131	394 - 656	–	0.008 - 0.024	0.020 - 0.039	0.012 - 0.028	0.024 - 0.047	0.016 - 0.031	0.031 - 0.063
	Spheroidal Cast Iron (Pearlitic)	> 200	49 - 98	394 - 656	–	0.008 - 0.024	0.020 - 0.039	0.012 - 0.028	0.024 - 0.047	0.016 - 0.031	0.031 - 0.063
	Spheroidal Cast Iron (Ferritic)	260 - 320	33 - 49	-	295 - 459	0.008 - 0.024	0.020 - 0.039	0.012 - 0.028	0.024 - 0.047	0.016 - 0.031	0.031 - 0.063
N	**Copper and Alloys Brass**	< 500	197 - 656	328 - 656	–	0.008 - 0.016	–	0.012 - 0.024	–	0.016 - 0.031	–
	Bronze Bronze Phosphorous	< 180	66 - 131	262 - 525	328 - 984	0.012 - 0.024	0.016 - 0.039	0.012 - 0.024	0.020 - 0.047	0.012 - 0.024	0.024 - 0.059
	Aluminum and Alloys	< 150	66 - 328	–	–	0.012 - 0.024	–	0.016 - 0.039	–	0.016 - 0.039	–

Formulas

1. **RPM = (SFM • 3.82) / DIA**
   where:
   RPM = revolutions per minute (rev/min)
   SFM = speed (ft/min)
   DIA = diameter of reamer (inch)

2. **IPM = RPM • IPR**
   where:
   IPM = inches per minute (in/min)
   RPM = revolutions per minute (rev/min)
   IPR = feed rate (in/rev)

3. **SFM = RPM • 0.262 • DIA**
   where:
   SFM = speed (ft/min)
   RPM = revolutions per minute (rev/min)
   DIA = diameter of reamer (inch)

IMPORTANT: The speeds and feeds listed on these pages are a general starting point for all applications. Factory technical assistance is also available for specific applications through our Application Engineering department. *ext:* **7611** | *email:* **appeng@alliedmachine.com**

Stock Allowance and Coolant | Imperial (inch)

Replaceable Head Style | 9000 Series

ISO	Material	Hardness (BHN)	Coolant	Recommended Stock (inch) by Reamer Diameter* 0.4646" - 0.8504"	0.8505" - 1.5590"	1.5591" - 1.5984"
P	**Free-Machining Steel**	100 - 180	Water Soluble / Cutting Oil	0.006 - 0.010	0.008 - 0.016	0.012 - 0.016
	1118, 1215, 12L14, etc.	180 - 250				
	Low-Carbon Steel	85 - 180				
	1010, 1020, 1025, 1522, 1144, etc.	180 - 275				
	Medium-Carbon Steel	125 - 180				
	1030, 1040, 1050, 1527, 1140, 1151, etc.	180 - 325				
	Alloy Steel	125 - 180				
	4140, 5140, 8640, etc.	180 - 375				
	High-Strength Alloy 4340, 4330V, 300M, etc.	240 - 450				
	Structural Steel	125 - 180				
	A36, A285, A516	180 - 350				
	Tool Steel	150 - 200				
	H-13, H-21, A-4, 0-2, S-3, etc.	200 - 250				
S	**High-Temp Alloy** Hastelloy B, Inconel 600, etc.	140 - 310	Water Soluble / Cutting Oil	0.006 - 0.010	0.008 - 0.016	0.012 - 0.016
	Titanium Alloy	140 - 310				
M	**Stainless Steel 400 Series** 416, 420, etc.	135 - 350	Water Soluble / Cutting Oil	0.006 - 0.010	0.008 - 0.016	0.012 - 0.016
	Stainless Steel 300 Series 304, 316, 17-4PH, etc.	135 - 275				
K	**Grey Cast Iron, Ductile Cast Iron,**	< 200	Water Soluble / Cutting Oil	0.006 - 0.010	0.008 - 0.016	0.012 - 0.016
	Spheroidal Cast Iron (Pearlitic)	> 200				
	Spheroidal Cast Iron (Ferritic)	260 - 320				
N	**Copper and Alloys Brass**	< 500	Water Soluble	0.006 - 0.010	0.008 - 0.016	0.012 - 0.016
	Bronze Bronze Phosphorous	< 180	Water Soluble / Cutting Oil			
	Aluminum and Alloys	< 150	Water Soluble / Cutting Oil			

*Stock value is on diameter.

IMPORTANT: The speeds and feeds listed on these pages are a general starting point for all applications. Factory technical assistance is also available for specific applications through our Application Engineering department. *ext:* **7611** | *email:* **appeng@alliedmachine.com**

Recommended Cutting Data | Imperial (inch)

Replaceable Head Style | 5000 Series

ISO	Material	Hardness (BHN)	Speed (SFM) Uncoated Carbide	Coated Carbide	Coated Cermet	Uncoated Cermet	Recommended Feed (IPR) by Reamer Diameter 0.4646" - 0.8504" Lead A, G	Lead E, N, M	0.8505" - 1.5590" Lead A, G	Lead E, N, M	1.5591" - 1.5984" Lead A, G	Lead E, N, M
P	**Free-Machining Steel**	100-180	49-66	197-262	394-656	394-656	0.012-0.024	0.016-0.031	0.016-0.031	0.020-0.039	0.020-0.035	0.024-0.047
	1118, 1215, 12L14, etc.	180-250	66-131	262-328	394-656	394-656	0.012-0.024	0.016-0.031	0.016-0.031	0.020-0.039	0.020-0.035	0.024-0.047
	Low-Carbon Steel	85-180	49-66	197-262	394-656	394-656	0.012-0.024	0.016-0.031	0.016-0.031	0.020-0.039	0.020-0.035	0.024-0.047
	1010, 1020, 1025, 1522, 1144, etc.	180-275	66-131	262-328	394-656	394-656	0.012-0.024	0.016-0.031	0.016-0.031	0.020-0.039	0.020-0.035	0.024-0.047
	Medium-Carbon Steel	125-180	49-66	197-262	394-656	394-656	0.012-0.024	0.016-0.031	0.016-0.031	0.020-0.039	0.020-0.035	0.024-0.047
	1030, 1040, 1050, 1527, 1140, 1151, etc.	180-325	66-131	262-328	394-656	394-656	0.012-0.024	0.016-0.031	0.016-0.031	0.020-0.039	0.020-0.035	0.024-0.047
	Alloy Steel	125-180	33-49	197-262	-	328-492	0.012-0.024	0.016-0.031	0.016-0.031	0.020-0.039	0.020-0.035	0.024-0.047
	4140, 5140, 8640, etc.	180-375	26-33	197-262	-	-	0.010-0.020	0.012-0.024	0.012-0.024	0.016-0.031	0.016-0.028	0.020-0.039
	High-Strength Alloy 4340, 4330V, 300M, etc.	240-450	26-33	197-262	-	-	0.010-0.020	0.012-0.024	0.012-0.024	0.016-0.031	0.016-0.028	0.020-0.039
	Structural Steel	125-180	49-66	197-262	394-656	394-656	0.012-0.024	0.016-0.031	0.016-0.031	0.020-0.039	0.020-0.035	0.024-0.047
	A36, A285, A516	180-350	66-131	262-328	394-656	394-656	0.012-0.024	0.016-0.031	0.016-0.031	0.020-0.039	0.020-0.035	0.024-0.047
	Tool Steel	150-200	49-66	197-262	394-656	394-656	0.012-0.024	0.016-0.031	0.016-0.031	0.020-0.039	0.020-0.035	0.024-0.047
	H-13, H-21, A-4, 0-2, S-3, etc.	200-250	66-131	262-328	394-656	394-656	0.012-0.024	0.016-0.031	0.016-0.031	0.020-0.039	0.020-0.035	0.024-0.047
S	**High-Temp Alloy** Hastelloy B, Inconel 600, etc.	140-310	16-23	66-98	-	-	0.010-0.020	0.012-0.024	0.012-0.024	0.016-0.031	0.016-0.028	0.020-0.039
	Titanium Alloy	140-310	33-49	-	-	-	0.010-0.020	0.012-0.024	0.012-0.024	0.016-0.031	0.016-0.028	0.020-0.039
M	**Stainless Steel 400 Series** 416, 420, etc.	135-350	26-33	-	-	164-197	0.010-0.020	0.012-0.024	0.012-0.024	0.016-0.031	0.016-0.028	0.020-0.039
	Stainless Steel 300 Series 304, 316, 17-4PH, etc.	135-275	26-33	98-131	-	-	0.010-0.020	0.012-0.024	0.012-0.024	0.016-0.031	0.016-0.028	0.020-0.039
K	**Grey Cast Iron, Ductile Cast Iron,**	< 200	66-98	492-656	-	-	0.012-0.024	0.020-0.039	0.012-0.024	0.024-0.047	0.016-0.031	0.024-0.047
	Spheroidal Cast Iron (Pearlitic)	> 200	49-66	-	328-656	-	0.012-0.024	0.020-0.039	0.012-0.024	0.024-0.047	0.016-0.031	0.024-0.047
	Spheroidal Cast Iron (Ferritic)	260-320	49-66	-	328-394	-	0.012-0.024	0.020-0.039	0.012-0.024	0.024-0.047	0.016-0.031	0.024-0.047
N	**Copper and Alloys** **Brass**	< 500	262-328	328-656	-	-	0.012-0.024	0.016-0.031	0.016-0.031	0.020-0.039	0.020-0.035	0.024-0.047
	Bronze **Bronze Phosphorous**	< 180	131-262	262-525	-	492-656	0.012-0.024	0.016-0.031	0.016-0.031	0.020-0.039	0.020-0.035	0.024-0.047
	Aluminum and Alloys	< 150	328-984	328-984	328-984	328-984	0.012-0.024	0.020-0.039	0.012-0.024	0.024-0.047	0.016-0.031	0.024-0.047

Formulas

1. **RPM = (SFM • 3.82) / DIA**

where:

RPM = revolutions per minute (rev/min)
SFM = speed (ft/min)
DIA = diameter of reamer (inch)

2. **IPM = RPM • IPR**

where:

IPM = inches per minute (in/min)
RPM = revolutions per minute (rev/min)
IPR = feed rate (in/rev)

3. **SFM = RPM • 0.262 • DIA**

where:

SFM = speed (ft/min)
RPM = revolutions per minute (rev/min)
DIA = diameter of reamer (inch)

IMPORTANT: The speeds and feeds listed on these pages are a general starting point for all applications. Factory technical assistance is also available for specific applications through our Application Engineering department. *ext:* **7611** | *email:* **appeng@alliedmachine.com**

Stock Allowance and Coolant | Imperial (inch)

Replaceable Head Style | 5000 Series

ISO	Material	Hardness (BHN)	Coolant	Recommended Stock (inch) by Reamer Diameter* 0.4646" - 0.8504"	0.8505" - 1.5590"	1.5591" - 2.3858"
P	**Free-Machining Steel**	100 - 180	Water Soluble / Cutting Oil	0.006 - 0.010	0.008 - 0.016	0.012 - 0.016
	1118, 1215, 12L14, etc.	180 - 250				
	Low-Carbon Steel	85 - 180				
	1010, 1020, 1025, 1522, 1144, etc.	180 - 275				
	Medium-Carbon Steel	125 - 180				
	1030, 1040, 1050, 1527, 1140, 1151, etc.	180 - 325				
	Alloy Steel	125 - 180				
	4140, 5140, 8640, etc.	180 - 375				
	High-Strength Alloy 4340, 4330V, 300M, etc.	240 - 450				
	Structural Steel	125 - 180				
	A36, A285, A516	180 - 350				
	Tool Steel	150 - 200				
	H-13, H-21, A-4, 0-2, S-3, etc.	200 - 250				
S	**High-Temp Alloy** Hastelloy B, Inconel 600, etc.	140 - 310	Water Soluble / Cutting Oil	0.006 - 0.010	0.008 - 0.016	0.012 - 0.016
	Titanium Alloy	140 - 310				
M	**Stainless Steel 400 Series** 416, 420, etc.	135 - 350	Water Soluble / Cutting Oil	0.006 - 0.010	0.008 - 0.016	0.012 - 0.016
	Stainless Steel 300 Series 304, 316, 17-4PH, etc.	135 - 275				
K	**Grey Cast Iron, Ductile Cast Iron,**	< 200	Water Soluble / Cutting Oil	0.006 - 0.010	0.008 - 0.016	0.012 - 0.016
	Spheroidal Cast Iron (Pearlitic)	> 200				
	Spheroidal Cast Iron (Ferritic)	260 - 320				
N	**Copper and Alloys Brass**	< 500	Water Soluble	0.006 - 0.010	0.008 - 0.016	0.012 - 0.016
	Bronze Bronze Phosphorous	< 180	Water Soluble / Cutting Oil			
	Aluminum and Alloys	< 150	Water Soluble / Cutting Oil			

*Stock value is on diameter.

IMPORTANT: The speeds and feeds listed on these pages are a general starting point for all applications. Factory technical assistance is also available for specific applications through our Application Engineering department. *ext:* **7611** | *email:* **appeng@alliedmachine.com**

Recommended Cutting Data | Imperial (inch)

Monobloc Style

ISO	Material	Hardness (BHN)	Speed (SFM) Uncoated Carbide	Speed (SFM) Coated Carbide	Speed (SFM) Cermet	Recommended Feed (IPR) by Reamer Diameter 0.2283" - 0.3940" Lead A, G	0.2283" - 0.3940" Lead E, N, M	0.3941" - 0.7090" Lead A, G	0.3941" - 0.7090" Lead E, N, M	0.7091" - 1.2638" Lead A, G	0.7091" - 1.2638" Lead E, N, M
P	**Free-Machining Steel**	100 - 180	25 - 50	200 - 260	300 - 980	0.008 - 0.016	0.012 - 0.024	0.016 - 0.024	0.016 - 0.047	0.020 - 0.031	0.024 - 0.047
	1118, 1215, 12L14, etc.	180 - 250	20 - 35	130 - 230	260 - 660	0.008 - 0.016	0.012 - 0.020	0.012 - 0.024	0.012 - 0.031	0.016 - 0.028	0.016 - 0.047
	Low-Carbon Steel	85 - 180	25 - 50	200 - 260	300 - 980	0.008 - 0.016	0.012 - 0.024	0.016 - 0.024	0.016 - 0.047	0.020 - 0.031	0.024 - 0.047
	1010, 1020, 1025, 1522, 1144, etc.	180 - 275	20 - 35	130 - 230	260 - 660	0.008 - 0.016	0.012 - 0.020	0.012 - 0.024	0.012 - 0.031	0.016 - 0.028	0.016 - 0.047
	Medium-Carbon Steel	125 - 180	25 - 50	200 - 260	300 - 980	0.008 - 0.016	0.012 - 0.024	0.016 - 0.024	0.016 - 0.047	0.020 - 0.031	0.024 - 0.047
	1030, 1040, 1050, 1527, 1140, 1151, etc.	180 - 325	20 - 35	130 - 230	260 - 660	0.008 - 0.016	0.012 - 0.020	0.012 - 0.024	0.012 - 0.031	0.016 - 0.028	0.016 - 0.047
	Alloy Steel	125 - 180	20 - 35	130 - 230	260 - 660	0.008 - 0.016	0.012 - 0.024	0.016 - 0.024	0.016 - 0.047	0.020 - 0.031	0.024 - 0.047
	4140, 5140, 8640, etc.	180 - 375	15 - 25	100 - 160	200 - 490	0.008 - 0.016	0.012 - 0.020	0.012 - 0.024	0.012 - 0.031	0.016 - 0.028	0.016 - 0.047
	High-Strength Alloy 4340, 4330V, 300M, etc.	240 - 450	10 - 20	50 - 100	200 - 390	0.006 - 0.012	0.008 - 0.016	0.008 - 0.020	0.012 - 0.024	0.012 - 0.024	0.016 - 0.031
	Structural Steel	125 - 180	25 - 50	200 - 260	300 - 980	0.008 - 0.016	0.012 - 0.024	0.016 - 0.024	0.016 - 0.047	0.020 - 0.031	0.024 - 0.047
	A36, A285, A516	180 - 350	20 - 35	130 - 230	260 - 660	0.008 - 0.016	0.012 - 0.020	0.012 - 0.024	0.012 - 0.031	0.016 - 0.028	.0016 - 0.047
	Tool Steel	150 - 200	25 - 50	200 - 260	300 - 980	0.008 - 0.016	0.012 - 0.024	0.016 - 0.024	0.016 - 0.047	0.020 - 0.031	0.024 - 0.047
	H-13, H-21, A-4, 0-2, S-3, etc.	200 - 250	20 - 35	130 - 230	260 - 660	0.008 - 0.016	0.012 - 0.020	0.012 - 0.024	0.012 - 0.031	0.016 - 0.028	0.016 - 0.047
S	**High-Temp Alloy** Hastelloy B, Inconel 600, etc.	140 - 310	15 - 25	60 - 200	–	0.006 - 0.012	–	0.008 - 0.016	–	0.012 - 0.020	–
	Titanium Alloy	140 - 310	15 - 25	60 - 200	–	0.006 - 0.012	–	0.008 - 0.016	–	0.012 - 0.020	–
M	**Stainless Steel 400 Series** 416, 420, etc.	135 - 350	15 - 25	100 - 160	200 - 490	0.008 - 0.016	0.012 - 0.020	0.012 - 0.024	0.012 - 0.031	0.016 - 0.028	0.016 - 0.047
	Stainless Steel 300 Series 304, 316, 17-4PH, etc.	135 - 275	15 - 25	100 - 160	200 - 490	0.008 - 0.016	0.012 - 0.020	0.012 - 0.024	0.012 - 0.031	0.016 - 0.028	0.016 - 0.047
K	**Grey Cast Iron, Ductile Cast Iron,**	< 200	50 - 100	160 - 230	–	0.008 - 0.016	0.012 - 0.024	0.014 - 0.024	0.020 - 0.031	0.016 - 0.047	0.024 - 0.059
	Spheroidal Cast Iron (Pearlitic)	> 200	35 - 65	160 - 230	–	0.008 - 0.016	0.012 - 0.024	0.014 - 0.024	0.020 - 0.031	0.016 - 0.047	0.024 - 0.059
	Spheroidal Cast Iron (Ferritic)	260 - 320	25 - 40	100 - 160	200 - 400	0.008 - 0.016	0.012 - 0.024	0.014 - 0.024	0.020 - 0.031	0.016 - 0.047	0.024 - 0.059
N	**Copper and Alloys Brass**	< 500	35 - 60	330 - 660	–	0.008 - 0.016	–	0.016 - 0.028	–	0.020 - 0.031	–
	Bronze Bronze Phosphorous	< 180	35 - 65	260 - 520	330 - 980	0.006 - 0.012	–	0.008 - 0.016	–	0.012 - 0.024	–
	Aluminum and Alloys	< 150	50 - 100	330 - 660	–	0.008 - 0.016	–	0.016 - 0.028	–	0.020 - 0.031	–

Formulas

1. **RPM = (SFM • 3.82) / DIA**

where:

RPM	= revolutions per minute (rev/min)
SFM	= speed (ft/min)
DIA	= diameter of reamer (inch)

2. **IPM = RPM • IPR**

where:

IPM	= inches per minute (in/min)
RPM	= revolutions per minute (rev/min)
IPR	= feed rate (in/rev)

3. **SFM = RPM • 0.262 • DIA**

where:

SFM	= speed (ft/min)
RPM	= revolutions per minute (rev/min)
DIA	= diameter of reamer (inch)

IMPORTANT: The speeds and feeds listed on these pages are a general starting point for all applications. Factory technical assistance is also available for specific applications through our Application Engineering department. *ext:* **7611** | *email:* **appeng@alliedmachine.com**

Stock Allowance and Coolant | Imperial (inch)

Monobloc Style

ISO	Material	Hardness (BHN)	Coolant	Recommended Stock (inch) by Reamer Diameter* 0.2283" - 0.3940"	0.3941" - 0.7090"	0.7091" - 1.2638"
P	**Free-Machining Steel**	100 - 180	Water Soluble / Cutting Oil	0.006 - 0.012	0.008 - 0.016	0.010 - 0.020
	1118, 1215, 12L14, etc.	180 - 250				
	Low-Carbon Steel	85 - 180				
	1010, 1020, 1025, 1522, 1144, etc.	180 - 275				
	Medium-Carbon Steel	125 - 180				
	1030, 1040, 1050, 1527, 1140, 1151, etc.	180 - 325				
	Alloy Steel	125 - 180				
	4140, 5140, 8640, etc.	180 - 375				
	High-Strength Alloy 4340, 4330V, 300M, etc.	240 - 450				
	Structural Steel	125 - 180				
	A36, A285, A516	180 - 350				
	Tool Steel	150 - 200				
	H-13, H-21, A-4, 0-2, S-3, etc.	200 - 250				
S	**High-Temp Alloy** Hastelloy B, Inconel 600, etc.	140 - 310	Water Soluble / Cutting Oil	0.008 - 0.016	0.012 - 0.016	0.012 - 0.020
	Titanium Alloy	140 - 310				
M	**Stainless Steel 400 Series** 416, 420, etc.	135 - 350	Water Soluble / Cutting Oil	0.006 - 0.012	0.008 - 0.016	0.010 - 0.020
	Stainless Steel 300 Series 304, 316, 17-4PH, etc.	135 - 275				
K	**Grey Cast Iron, Ductile Cast Iron, Spheroidal Cast Iron (Pearlitic)**	< 200	Water Soluble / Cutting Oil	0.006 - 0.012	0.008 - 0.016	0.010 - 0.020
		> 200				
	Spheroidal Cast Iron (Ferritic)	260 - 320				
N	**Copper and Alloys Brass**	< 500	Water Soluble	0.006 - 0.012	0.008 - 0.016	0.010 - 0.020
	Bronze Bronze Phosphorous	< 180	Water Soluble / Cutting Oil			
	Aluminum and Alloys	< 150	Water Soluble / Cutting Oil			

*Stock value is on diameter.

IMPORTANT: The speeds and feeds listed on these pages are a general starting point for all applications. Factory technical assistance is also available for specific applications through our Application Engineering department. *ext:* **7611** | *email:* **appeng@alliedmachine.com**

Recommended Cutting Data | Imperial (inch)

Cutting Ring Style

ISO	Material	Hardness (BHN)	Speed (SFM) Uncoated Carbide	Speed (SFM) Coated Carbide	Speed (SFM) Cermet	Recommended Feed (IPR) by Reamer Diameter 0.6929" - 1.5750" Lead A, G	0.6929" - 1.5750" Lead E, N, M	1.5751" - 3.1500" Lead A, G	1.5751" - 3.1500" Lead E, N, M	3.1501" - 7.8972" Lead A, G	3.1501" - 7.8972" Lead E, N, M
P	**Free-Machining Steel**	100 - 180	25 - 50	200 - 260	300 - 980	0.020 - 0.031	0.024 - 0.047	0.020 - 0.039	0.031 - 0.063	0.031 - 0.059	0.039 - 0.087
	1118, 1215, 12L14, etc.	180 - 250	20 - 35	130 - 230	260 - 660	0.016 - 0.028	0.016 - 0.039	0.020 - 0.031	0.024 - 0.055	0.031 - 0.047	0.039 - 0.079
	Low-Carbon Steel	85 - 180	25 - 50	200 - 260	300 - 980	0.020 - 0.031	0.024 - 0.047	0.020 - 0.039	0.031 - 0.063	0.031 - 0.059	0.039 - 0.087
	1010, 1020, 1025, 1522, 1144, etc.	180 - 275	20 - 35	130 - 230	260 - 660	0.016 - 0.028	0.016 - 0.039	0.020 - 0.031	0.024 - 0.055	0.031 - 0.047	0.039 - 0.079
	Medium-Carbon Steel	125 - 180	25 - 50	200 - 260	300 - 980	0.020 - 0.031	0.024 - 0.047	0.020 - 0.039	0.031 - 0.063	0.031 - 0.059	0.039 - 0.087
	1030, 1040, 1050, 1527, 1140, 1151, etc.	180 - 325	20 - 35	130 - 230	260 - 660	0.016 - 0.028	0.016 - 0.039	0.020 - 0.031	0.024 - 0.055	0.031 - 0.047	0.039 - 0.079
	Alloy Steel	125 - 180	20 - 35	130 - 230	260 - 660	0.020 - 0.031	0.024 - 0.047	0.020 - 0.039	0.031 - 0.063	0.031 - 0.059	0.039 - 0.087
	4140, 5140, 8640, etc.	180 - 375	15 - 25	100 - 160	200 - 490	0.016 - 0.028	0.016 - 0.039	0.020 - 0.031	0.024 - 0.055	0.031 - 0.047	0.039 - 0.079
	High-Strength Alloy 4340, 4330V, 300M, etc.	240 - 450	10 - 20	50 - 100	200 - 390	0.012 - 0.024	0.016 - 0.031	0.016 - 0.031	0.020 - 0.039	0.024 - 0.039	0.028 - 0.055
	Structural Steel	125 - 180	25 - 50	200 - 260	300 - 980	0.020 - 0.031	0.024 - 0.047	0.020 - 0.039	0.031 - 0.063	0.031 - 0.059	0.039 - 0.087
	A36, A285, A516	180 - 350	20 - 35	130 - 230	260 - 660	0.016 - 0.028	0.016 - 0.039	0.020 - 0.031	0.024 - 0.055	0.031 - 0.047	0.039 - 0.079
	Tool Steel	150 - 200	25 - 50	200 - 260	300 - 980	0.020 - 0.031	0.024 - 0.047	0.020 - 0.039	0.031 - 0.063	0.031 - 0.059	0.039 - 0.087
	H-13, H-21, A-4, 0-2, S-3, etc.	200 - 250	20 - 35	130 - 230	260 - 660	0.016 - 0.028	0.016 - 0.039	0.020 - 0.031	0.024 - 0.055	0.031 - 0.047	0.039 - 0.079
S	**High-Temp Alloy** Hastelloy B, Inconel 600, etc.	140 - 310	15 - 25	60 - 200	–	0.012 - 0.020	–	0.016 - 0.024	–	0.020 - 0.028	–
	Titanium Alloy	140 - 310	15 - 25	60 - 200	–	0.012 - 0.020	–	0.016 - 0.024	–	0.020 - 0.028	–
M	**Stainless Steel 400 Series** 416, 420, etc.	135 - 350	15 - 25	100 - 160	200 - 490	0.016 - 0.028	0.016 - 0.039	0.020 - 0.031	0.024 - 0.055	0.031 - 0.047	0.039 - 0.079
	Stainless Steel 300 Series 304, 316, 17-4PH, etc.	135 - 275	15 - 25	100 - 160	200 - 490	0.016 - 0.028	0.016 - 0.039	0.020 - 0.031	0.024 - 0.055	0.031 - 0.047	0.039 - 0.079
K	**Grey Cast Iron, Ductile Cast Iron,**	< 200	50 - 100	160 - 230	–	0.016 - 0.039	0.024 - 0.059	0.024 - 0.051	0.031 - 0.063	0.031 - 0.067	0.039 - 0.088
	Spheroidal Cast Iron (Pearlitic)	> 200	35 - 65	160 - 230	–	0.016 - 0.039	0.024 - 0.059	0.024 - 0.051	0.031 - 0.063	0.031 - 0.067	0.039 - 0.088
	Spheroidal Cast Iron (Ferritic)	260 - 320	25 - 40	100 - 160	200 - 400	0.016 - 0.039	0.024 - 0.059	0.024 - 0.051	0.031 - 0.063	0.031 - 0.067	0.039 - 0.088
N	**Copper and Alloys Brass**	< 500	35 - 60	330 - 660	–	0.020 - 0.031	–	0.024 - 0.039	–	0.031 - 0.055	–
	Bronze Bronze Phosphorous	< 180	35 - 65	260 - 520	330 - 980	0.012 - 0.024	–	0.016 - 0.031	–	0.024 - 0.039	–
	Aluminum and Alloys	< 150	50 - 100	330 - 660	–	0.020 - 0.031	–	0.024 - 0.039	–	0.031 - 0.055	–

Formulas

1. **RPM = (SFM • 3.82) / DIA**
   where:
   RPM = revolutions per minute (rev/min)
   SFM = speed (ft/min)
   DIA = diameter of reamer (inch)

2. **IPM = RPM • IPR**
   where:
   IPM = inches per minute (in/min)
   RPM = revolutions per minute (rev/min)
   IPR = feed rate (in/rev)

3. **SFM = RPM • 0.262 • DIA**
   where:
   SFM = speed (ft/min)
   RPM = revolutions per minute (rev/min)
   DIA = diameter of reamer (inch)

IMPORTANT: The speeds and feeds listed on these pages are a general starting point for all applications. Factory technical assistance is also available for specific applications through our Application Engineering department. *ext:* **7611** | *email:* **appeng@alliedmachine.com**

Stock Allowance and Coolant | Imperial (inch)

Cutting Ring Style

ISO	Material	Hardness (BHN)	Coolant	Recommended Stock (inch) by Reamer Diameter* 0.6929" - 1.5750"	1.5751" - 3.1500"	3.1501" - 7.8972"
P	**Free-Machining Steel**	100 - 180	Water Soluble / Cutting Oil	0.006 - 0.012	0.008 - 0.016	0.010 - 0.020
	1118, 1215, 12L14, etc.	180 - 250				
	Low-Carbon Steel	85 - 180				
	1010, 1020, 1025, 1522, 1144, etc.	180 - 275				
	Medium-Carbon Steel	125 - 180				
	1030, 1040, 1050, 1527, 1140, 1151, etc.	180 - 325				
	Alloy Steel	125 - 180				
	4140, 5140, 8640, etc.	180 - 375				
	High-Strength Alloy 4340, 4330V, 300M, etc.	240 - 450				
	Structural Steel	125 - 180				
	A36, A285, A516	180 - 350				
	Tool Steel	150 - 200				
	H-13, H-21, A-4, 0-2, S-3, etc.	200 - 250				
S	**High-Temp Alloy** Hastelloy B, Inconel 600, etc.	140 - 310	Water Soluble / Cutting Oil	0.008 - 0.016	0.012 - 0.016	0.012 - 0.020
	Titanium Alloy	140 - 310				
M	**Stainless Steel 400 Series** 416, 420, etc.	135 - 350	Water Soluble / Cutting Oil	0.006 - 0.012	0.008 - 0.016	0.010 - 0.020
	Stainless Steel 300 Series 304, 316, 17-4PH, etc.	135 - 275				
K	**Grey Cast Iron, Ductile Cast Iron, Spheroidal Cast Iron (Pearlitic)**	< 200	Water Soluble / Cutting Oil	0.006 - 0.012	0.008 - 0.016	0.010 - 0.020
		> 200				
	Spheroidal Cast Iron (Ferritic)	260 - 320				
N	**Copper and Alloys Brass**	< 500	Water Soluble	0.006 - 0.012	0.008 - 0.016	0.010 - 0.020
	Bronze Bronze Phosphorous	< 180	Water Soluble / Cutting Oil			
	Aluminum and Alloys	< 150	Water Soluble / Cutting Oil			

*Stock value is on diameter.

IMPORTANT: The speeds and feeds listed on these pages are a general starting point for all applications. Factory technical assistance is also available for specific applications through our Application Engineering department. *ext:* **7611** | *email:* **appeng@alliedmachine.com**

Recommended Cutting Data | Metric (mm)

Replaceable Head Style | 7000 Series

ISO	Material	Hardness (BHN)	Speed (m/min)			Recommended Feed (mm/rev) by Reamer Diameter					
						11.80 mm - 21.60 mm		21.61 mm - 39.60 mm		39.61 mm - 80.60 mm	
			Uncoated Carbide	Coated Carbide	Cermet	Lead A, G	Lead E, N, M	Lead A, G	Lead E, N, M	Lead A, G	Lead E, N, M
P	**Free-Machining Steel**	100 - 180	10 - 20	60 - 80	90 - 300	0.25 - 0.60	0.50 - 1.00	0.30 - 0.80	0.60 - 1.20	0.60 - 1.00	0.70 - 1.50
	1118, 1215, 12L14, etc.	180 - 250	7 - 15	40 - 70	80 - 200	0.30 - 0.60	0.40 - 0.80	0.40 - 0.80	0.50 - 1.00	0.50 - 0.90	0.60 - 1.20
	Low-Carbon Steel	85 - 180	10 - 20	60 - 80	90 - 300	0.25 - 0.60	0.50 - 1.00	0.30 - 0.80	0.60 - 1.20	0.60 - 1.00	0.70 - 1.50
	1010, 1020, 1025, 1522, 1144, etc.	180 - 275	7 - 15	40 - 70	80 - 200	0.30 - 0.60	0.40 - 0.80	0.40 - 0.80	0.50 - 1.00	0.50 - 0.90	0.60 - 1.20
	Medium-Carbon Steel	125 - 180	10 - 20	60 - 80	90 - 300	0.25 - 0.60	0.50 - 1.00	0.30 - 0.80	0.60 - 1.20	0.60 - 1.00	0.70 - 1.50
	1030, 1040, 1050, 1527, 1140, 1151, etc.	180 - 325	7 - 15	40 - 70	80 - 200	0.30 - 0.60	0.40 - 0.80	0.40 - 0.80	0.50 - 1.00	0.50 - 0.90	0.60 - 1.20
	Alloy Steel	125 - 180	6 - 10	40 - 60	50 - 60	0.30 - 0.60	0.40 - 0.80	0.40 - 0.80	0.50 - 1.00	0.50 - 0.90	0.60 - 1.20
	4140, 5140, 8640, etc.	180 - 375	4 - 8	40 - 50	60 - 120	0.25 - 0.50	0.30 - 0.60	0.30 - 0.60	0.40 - 0.80	0.40 - 0.70	0.50 - 1.00
	High-Strength Alloy 4340, 4330V, 300M, etc.	240 - 450	4 - 8	40 - 50	60 - 120	0.25 - 0.50	0.30 - 0.60	0.30 - 0.60	0.40 - 0.80	0.40 - 0.70	0.50 - 1.00
	Structural Steel	125 - 180	10 - 20	60 - 80	90 - 300	0.25 - 0.60	0.50 - 1.00	0.30 - 0.80	0.60 - 1.20	0.60 - 1.00	0.70 - 1.50
	A36, A285, A516	180 - 350	7 - 15	40 - 70	80 - 200	0.30 - 0.60	0.40 - 0.80	0.40 - 0.80	0.50 - 1.00	0.50 - 0.90	0.60 - 1.20
	Tool Steel	150 - 200	10 - 20	60 - 80	90 - 300	0.25 - 0.60	0.50 - 1.00	0.30 - 0.80	0.60 - 1.20	0.60 - 1.00	0.70 - 1.50
	H-13, H-21, A-4, 0-2, S-3, etc.	200 - 250	7 - 15	40 - 70	80 - 200	0.30 - 0.60	0.40 - 0.80	0.40 - 0.80	0.50 - 1.00	0.50 - 0.90	0.60 - 1.20
S	**High-Temp Alloy** Hastelloy B, Inconel 600, etc.	140 - 310	4 - 10	30 - 50	–	0.20 - 0.40	–	0.30 - 0.50	–	0.40 - 0.60	–
	Titanium Alloy	140 - 310	4 - 15	30 - 50	–	0.20 - 0.40	–	0.30 - 0.50	–	0.40 - 0.60	–
M	**Stainless Steel 400 Series** 416, 420, etc.	135 - 350	6 - 10	40 - 60	50 - 60	0.30 - 0.60	0.40 - 0.80	0.40 - 0.80	0.50 - 1.00	0.50 - 0.90	0.60 - 1.20
	Stainless Steel 300 Series 304, 316, 17-4PH, etc.	135 - 275	6 - 10	40 - 60	50 - 60	0.30 - 0.60	0.40 - 0.80	0.40 - 0.80	0.50 - 1.00	0.50 - 0.90	0.60 - 1.20
K	**Grey Cast Iron, Ductile Cast Iron,**	< 200	20 - 40	120 - 200	–	0.20 - 0.60	0.50 - 1.00	0.30 - 0.70	0.60 - 1.20	0.40 - 0.80	0.80 - 1.60
	Spheroidal Cast Iron (Pearlitic)	> 200	15 - 30	120 - 200	–	0.20 - 0.60	0.50 - 1.00	0.30 - 0.70	0.60 - 1.20	0.40 - 0.80	0.80 - 1.60
	Spheroidal Cast Iron (Ferritic)	260 - 320	10 - 15	-	90 - 140	0.20 - 0.60	0.50 - 0.60	0.30 - 0.70	0.60 - 1.20	0.40 - 0.80	0.80 - 1.60
N	**Copper and Alloys Brass**	< 500	60 - 200	100 - 200	–	0.20 - 0.40	–	0.30 - 0.60	–	0.40 - 0.80	–
	Bronze Bronze Phosphorous	< 180	20 - 40	80 - 160	100 - 300	0.30 - 0.60	0.40 - 1.00	0.30 - 0.60	0.50 - 1.20	0.30 - 0.60	0.60 - 1.50
	Aluminum and Alloys	< 150	20 - 100	–	–	0.30 - 0.60	–	0.40 - 1.00	–	0.40 - 1.00	–

Formulas

1. **RPM = m/min • 3.82 • DIA**
   where:
   RPM = revolutions per minute (rev/min)
   m/min = speed (m/min)
   DIA = diameter of reamer (mm)

2. **mm/min = RPM • mm/rev**
   where:
   mm/min = mm per minute (mm/min)
   RPM = revolutions per minute (rev/min)
   mm/rev = feed rate (mm/rev)

3. **m/min = RPM • 0.003 • DIA**
   where:
   m/min = speed (m/min)
   RPM = revolutions per minute (rev/min)
   DIA = diameter of reamer (mm)

IMPORTANT: The speeds and feeds listed on these pages are a general starting point for all applications. Factory technical assistance is also available for specific applications through our Application Engineering department. *ext:* **7611** | *email:* **appeng@alliedmachine.com**

Stock Allowance and Coolant | Metric (mm)

Replaceable Head Style | 7000 Series

ISO	Material	Hardness (BHN)	Coolant	Recommended Stock (mm) by Reamer Diameter* 11.80 mm - 21.60 mm	21.61 mm - 39.60 mm	39.61 mm - 80.60 mm
P	**Free-Machining Steel**	100 - 180	Water Soluble / Cutting Oil	0.15 - 0.25	0.20 - 0.40	0.30 - 0.40
	1118, 1215, 12L14, etc.	180 - 250				
	Low-Carbon Steel	85 - 180				
	1010, 1020, 1025, 1522, 1144, etc.	180 - 275				
	Medium-Carbon Steel	125 - 180				
	1030, 1040, 1050, 1527, 1140, 1151, etc.	180 - 325				
	Alloy Steel	125 - 180				
	4140, 5140, 8640, etc.	180 - 375				
	High-Strength Alloy 4340, 4330V, 300M, etc.	240 - 450				
	Structural Steel	125 - 180				
	A36, A285, A516	180 - 350				
	Tool Steel	150 - 200				
	H-13, H-21, A-4, 0-2, S-3, etc.	200 - 250				
S	**High-Temp Alloy** Hastelloy B, Inconel 600, etc.	140 - 310	Water Soluble / Cutting Oil	0.15 - 0.25	0.20 - 0.40	0.30 - 0.40
	Titanium Alloy	140 - 310				
M	**Stainless Steel 400 Series** 416, 420, etc.	135 - 350	Water Soluble / Cutting Oil	0.15 - 0.25	0.20 - 0.40	0.30 - 0.40
	Stainless Steel 300 Series 304, 316, 17-4PH, etc.	135 - 275				
K	**Grey Cast Iron, Ductile Cast Iron,**	< 200	Water Soluble / Cutting Oil	0.15 - 0.25	0.20 - 0.40	0.30 - 0.40
	Spheroidal Cast Iron (Pearlitic)	> 200				
	Spheroidal Cast Iron (Ferritic)	260 - 320				
N	**Copper and Alloys Brass**	< 500	Water Soluble	0.15 - 0.25	0.20 - 0.40	0.30 - 0.40
	Bronze Bronze Phosphorous	< 180	Water Soluble / Cutting Oil			
	Aluminum and Alloys	< 150	Water Soluble / Cutting Oil			

*Stock value is on diameter.

IMPORTANT: The speeds and feeds listed on these pages are a general starting point for all applications. Factory technical assistance is also available for specific applications through our Application Engineering department. *ext:* **7611** | *email:* **appeng@alliedmachine.com**

Recommended Cutting Data | Metric (mm)

Replaceable Head Style | 9000 Series

ISO	Material	Hardness (BHN)	Speed (m/min) Uncoated Carbide	Speed (m/min) Coated Carbide	Speed (m/min) Cermet	Recommended Feed (mm/rev) by Reamer Diameter 11.80 mm - 21.60 mm Lead A, G	11.80 mm - 21.60 mm Lead E, N, M	21.61 mm - 39.60 mm Lead A, G	21.61 mm - 39.60 mm Lead E, N, M	39.61 mm - 40.60 mm Lead A, G	39.61 mm - 40.60 mm Lead E, N, M
P	**Free-Machining Steel**	100 - 180	10 - 20	60 - 80	90 - 300	0.25 - 0.60	0.50 - 1.00	0.30 - 0.80	0.60 - 1.20	0.60 - 1.00	0.70 - 1.50
	1118, 1215, 12L14, etc.	180 - 250	7 - 15	40 - 70	80 - 200	0.30 - 0.60	0.40 - 0.80	0.40 - 0.80	0.50 - 1.00	0.50 - 0.90	0.60 - 1.20
	Low-Carbon Steel	85 - 180	10 - 20	60 - 80	90 - 300	0.25 - 0.60	0.50 - 1.00	0.30 - 0.80	0.60 - 1.20	0.60 - 1.00	0.70 - 1.50
	1010, 1020, 1025, 1522, 1144, etc.	180 - 275	7 - 15	40 - 70	80 - 200	0.30 - 0.60	0.40 - 0.80	0.40 - 0.80	0.50 - 1.00	0.50 - 0.90	0.60 - 1.20
	Medium-Carbon Steel	125 - 180	10 - 20	60 - 80	90 - 300	0.25 - 0.60	0.50 - 1.00	0.30 - 0.80	0.60 - 1.20	0.60 - 1.00	0.70 - 1.50
	1030, 1040, 1050, 1527, 1140, 1151, etc.	180 - 325	7 - 15	40 - 70	80 - 200	0.30 - 0.60	0.40 - 0.80	0.40 - 0.80	0.50 - 1.00	0.50 - 0.90	0.60 - 1.20
	Alloy Steel	125 - 180	6 - 10	40 - 60	50 - 60	0.30 - 0.60	0.40 - 0.80	0.40 - 0.80	0.50 - 1.00	0.50 - 0.90	0.60 - 1.20
	4140, 5140, 8640, etc.	180 - 375	4 - 8	60 - 120	-	0.25 - 0.50	0.30 - 0.60	0.30 - 0.60	0.40 - 0.80	0.40 - 0.70	0.50 - 1.00
	High-Strength Alloy 4340, 4330V, 300M, etc.	240 - 450	4 - 8	60 - 120	-	0.25 - 0.50	0.30 - 0.60	0.30 - 0.60	0.40 - 0.80	0.40 - 0.70	0.50 - 1.00
	Structural Steel	125 - 180	10 - 20	60 - 80	90 - 300	0.25 - 0.60	0.50 - 1.00	0.30 - 0.80	0.60 - 1.20	0.60 - 1.00	0.70 - 1.50
	A36, A285, A516	180 - 350	7 - 15	40 - 70	80 - 200	0.30 - 0.60	0.40 - 0.80	0.40 - 0.80	0.50 - 1.00	0.50 - 0.90	0.60 - 1.20
	Tool Steel	150 - 200	10 - 20	60 - 80	90 - 300	0.25 - 0.60	0.50 - 1.00	0.30 - 0.80	0.60 - 1.20	0.60 - 1.00	0.70 - 1.50
	H-13, H-21, A-4, 0-2, S-3, etc.	200 - 250	7 - 15	40 - 70	80 - 200	0.30 - 0.60	0.40 - 0.80	0.40 - 0.80	0.50 - 1.00	0.50 - 0.90	0.60 - 1.20
S	**High-Temp Alloy** Hastelloy B, Inconel 600, etc.	140 - 310	6 - 10	15 - 30	–	0.20 - 0.40	–	0.30 - 0.50	–	0.40 - 0.60	–
	Titanium Alloy	140 - 310	6 - 10	15 - 30	–	0.20 - 0.40	–	0.30 - 0.50	–	0.40 - 0.60	–
M	**Stainless Steel 400 Series** 416, 420, etc.	135 - 350	6 - 10	40 - 60	50 - 60	0.30 - 0.60	0.40 - 0.80	0.40 - 0.80	0.50 - 1.00	0.50 - 0.90	0.60 - 1.20
	Stainless Steel 300 Series 304, 316, 17-4PH, etc.	135 - 275	6 - 10	40 - 60	50 - 60	0.30 - 0.60	0.40 - 0.80	0.40 - 0.80	0.50 - 1.00	0.50 - 0.90	0.60 - 1.20
K	**Grey Cast Iron, Ductile Cast Iron,**	< 200	20 - 40	120 - 200	–	0.20 - 0.60	0.50 - 1.00	0.30 - 0.70	0.60 - 1.20	0.40 - 0.80	0.80 - 1.60
	Spheroidal Cast Iron (Pearlitic)	> 200	15 - 30	120 - 200	–	0.20 - 0.60	0.50 - 1.00	0.30 - 0.70	0.60 - 1.20	0.40 - 0.80	0.80 - 1.60
	Spheroidal Cast Iron (Ferritic)	260 - 320	10 - 15	-	90 - 140	0.20 - 0.60	0.50 - 1.00	0.30 - 0.70	0.60 - 1.20	0.40 - 0.80	0.80 - 1.60
N	**Copper and Alloys Brass**	< 500	60 - 200	100 - 200	–	0.20 - 0.40	–	0.30 - 0.60	–	0.40 - 0.80	–
	Bronze Bronze Phosphorous	< 180	20 - 40	80 - 160	100 - 300	0.30 - 0.60	0.40 - 1.00	0.30 - 0.60	0.50 - 1.20	0.30 - 0.60	0.60 - 1.50
	Aluminum and Alloys	< 150	20 - 100	–	–	0.30 - 0.60	–	0.40 - 1.00	–	0.40 - 1.00	–

Formulas

1. **RPM = m/min • 3.82 • DIA**
   where:
   RPM = revolutions per minute (rev/min)
   m/min = speed (m/min)
   DIA = diameter of reamer (mm)

2. **mm/min = RPM • mm/rev**
   where:
   mm/min = mm per minute (mm/min)
   RPM = revolutions per minute (rev/min)
   mm/rev = feed rate (mm/rev)

3. **m/min = RPM • 0.003 • DIA**
   where:
   m/min = speed (m/min)
   RPM = revolutions per minute (rev/min)
   DIA = diameter of reamer (mm)

IMPORTANT: The speeds and feeds listed on these pages are a general starting point for all applications. Factory technical assistance is also available for specific applications through our Application Engineering department. *ext:* **7611** | *email:* **appeng@alliedmachine.com**

Stock Allowance and Coolant | Metric (mm)

Replaceable Head Style | 9000 Series

ISO	Material	Hardness (BHN)	Coolant	Recommended Stock (mm) by Reamer Diameter* 11.80 mm - 21.60 mm	21.61 mm - 39.60 mm	39.61 mm - 40.60 mm
P	**Free-Machining Steel**	100 - 180	Water Soluble / Cutting Oil	0.15 - 0.25	0.20 - 0.40	0.30 - 0.40
	1118, 1215, 12L14, etc.	180 - 250				
	Low-Carbon Steel	85 - 180				
	1010, 1020, 1025, 1522, 1144, etc.	180 - 275				
	Medium-Carbon Steel	125 - 180				
	1030, 1040, 1050, 1527, 1140, 1151, etc.	180 - 325				
	Alloy Steel	125 - 180				
	4140, 5140, 8640, etc.	180 - 375				
	High-Strength Alloy 4340, 4330V, 300M, etc.	240 - 450				
	Structural Steel	125 - 180				
	A36, A285, A516	180 - 350				
	Tool Steel	150 - 200				
	H-13, H-21, A-4, 0-2, S-3, etc.	200 - 250				
S	**High-Temp Alloy** Hastelloy B, Inconel 600, etc.	140 - 310	Water Soluble / Cutting Oil	0.15 - 0.25	0.20 - 0.40	0.30 - 0.40
	Titanium Alloy	140 - 310				
M	**Stainless Steel 400 Series** 416, 420, etc.	135 - 350	Water Soluble / Cutting Oil	0.15 - 0.25	0.20 - 0.40	0.30 - 0.40
	Stainless Steel 300 Series 304, 316, 17-4PH, etc.	135 - 275				
K	**Grey Cast Iron, Ductile Cast Iron,**	< 200	Water Soluble / Cutting Oil	0.15 - 0.25	0.20 - 0.40	0.30 - 0.40
	Spheroidal Cast Iron (Pearlitic)	> 200				
	Spheroidal Cast Iron (Ferritic)	260 - 320				
N	**Copper and Alloys Brass**	< 500	Water Soluble	0.15 - 0.25	0.20 - 0.40	0.30 - 0.40
	Bronze Bronze Phosphorous	< 180	Water Soluble / Cutting Oil			
	Aluminum and Alloys	< 150	Water Soluble / Cutting Oil			

*Stock value is on diameter.

IMPORTANT: The speeds and feeds listed on these pages are a general starting point for all applications. Factory technical assistance is also available for specific applications through our Application Engineering department. *ext:* **7611** | *email:* **appeng@alliedmachine.com**

Recommended Cutting Data | Metric (mm)

Replaceable Head Style | 5000 Series

ISO	Material	Hardness (BHN)	Speed (m/min)				Recommended Feed (mm/rev) by Reamer Diameter					
							9.61 mm - 17.60 mm		17.61 mm - 26.60 mm		26.61 mm - 32.60 mm	
			Uncoated Carbide	Coated Carbide	Coated Cermet	Uncoated Cermet	Lead A, G	Lead E, N, M	Lead A, G	Lead E, N, M	Lead A, G	Lead E, N, M
P	**Free-Machining Steel**	100-180	15 - 20	60 - 80	120 - 200	120 - 200	0.30 - 0.60	0.40 - 0.80	0.40 - 0.80	0.50 - 1.00	0.50 - 0.90	0.60 - 1.20
	1118, 1215, 12L14, etc.	180-250	20 - 40	80 - 100	120 - 200	120 - 200	0.30 - 0.60	0.40 - 0.80	0.40 - 0.80	0.50 - 1.00	0.50 - 0.90	0.60 - 1.20
	Low-Carbon Steel	85-180	15 - 20	60 - 80	120 - 200	120 - 200	0.30 - 0.60	0.40 - 0.80	0.40 - 0.80	0.50 - 1.00	0.50 - 0.90	0.60 - 1.20
	1010, 1020, 1025, 1522, 1144, etc.	180-275	20 - 40	80 - 100	120 - 200	120 - 200	0.30 - 0.60	0.40 - 0.80	0.40 - 0.80	0.50 - 1.00	0.50 - 0.90	0.60 - 1.20
	Medium-Carbon Steel	125-180	15 - 20	60 - 80	120 - 200	120 - 200	0.30 - 0.60	0.40 - 0.80	0.40 - 0.80	0.50 - 1.00	0.50 - 0.90	0.60 - 1.20
	1030, 1040, 1050, 1527, 1140, 1151, etc.	180-325	20 - 40	80 - 100	120 - 200	120 - 200	0.30 - 0.60	0.40 - 0.80	0.40 - 0.80	0.50 - 1.00	0.50 - 0.90	0.60 - 1.20
	Alloy Steel	125-180	10 - 15	60 - 80	-	100 - 150	0.30 - 0.60	0.40 - 0.80	0.40 - 0.80	0.50 - 1.00	0.50 - 0.90	0.60 - 1.20
	4140, 5140, 8640, etc.	180-375	8 - 10	60 - 80	-	-	0.25 - 0.50	0.30 - 0.60	0.30 - 0.60	0.40 - 0.80	0.40 - 0.70	0.50 - 1.00
	High-Strength Alloy 4340, 4330V, 300M, etc.	240-450	8 - 10	60 - 80	-	-	0.25 - 0.50	0.30 - 0.60	0.30 - 0.60	0.40 - 0.80	0.40 - 0.70	0.50 - 1.00
	Structural Steel	125-180	15 - 20	60 - 80	120 - 200	120 - 200	0.30 - 0.60	0.40 - 0.80	0.40 - 0.80	0.50 - 1.00	0.50 - 0.90	0.60 - 1.20
	A36, A285, A516	180-350	20 - 40	80 - 100	120 - 200	120 - 200	0.30 - 0.60	0.40 - 0.80	0.40 - 0.80	0.50 - 1.00	0.50 - 0.90	0.60 - 1.20
	Tool Steel	150-200	15 - 20	60 - 80	120 - 200	120 - 200	0.30 - 0.60	0.40 - 0.80	0.40 - 0.80	0.50 - 1.00	0.50 - 0.90	0.60 - 1.20
	H-13, H-21, A-4, 0-2, S-3, etc.	200-250	20 - 40	80 - 100	120 - 200	120 - 200	0.30 - 0.60	0.40 - 0.80	0.40 - 0.80	0.50 - 1.00	0.50 - 0.90	0.60 - 1.20
S	**High-Temp Alloy** Hastelloy B, Inconel 600, etc.	140-310	5 - 7	20 - 30	-	-	0.25 - 0.50	0.30 - 0.60	0.30 - 0.60	0.40 - 0.80	0.40 - 0.70	0.50 - 1.00
	Titanium Alloy	140-310	10 - 15	-	-	-	0.25 - 0.50	0.30 - 0.60	0.30 - 0.60	0.40 - 0.80	0.40 - 0.70	0.50 - 1.00
M	**Stainless Steel 400 Series** 416, 420, etc.	135-350	8 - 10	-	-	50 - 60	0.25 - 0.50	0.30 - 0.60	0.30 - 0.60	0.40 - 0.80	0.40 - 0.70	0.50 - 1.00
	Stainless Steel 300 Series 304, 316, 17-4PH, etc.	135-275	8 - 10	30 - 40	-	-	0.25 - 0.50	0.30 - 0.60	0.30 - 0.60	0.40 - 0.80	0.40 - 0.70	0.50 - 1.00
K	**Grey Cast Iron, Ductile Cast Iron,**	< 200	20 - 30	150 - 200	-	-	0.30 - 0.60	0.50 - 1.00	0.30 - 0.60	0.60 - 1.20	0.40 - 0.80	0.60 - 1.20
	Spheroidal Cast Iron (Pearlitic)	> 200	15 - 20	-	100 - 200	-	0.30 - 0.60	0.50 - 1.00	0.30 - 0.60	0.60 - 1.20	0.40 - 0.80	0.60 - 1.20
	Spheroidal Cast Iron (Ferritic)	260-320	15 - 20	-	100 - 120	-	0.30 - 0.60	0.50 - 1.00	0.30 - 0.60	0.60 - 1.20	0.40 - 0.80	0.60 - 1.20
N	**Copper and Alloys** **Brass**	< 500	80 - 100	100 - 200	-	-	0.30 - 0.60	0.40 - 0.80	0.40 - 0.80	0.50 - 1.00	0.50 - 0.90	0.60 - 1.20
	Bronze **Bronze Phosphorous**	< 180	40 - 80	80 - 160	-	150 - 200	0.30 - 0.60	0.40 - 0.80	0.40 - 0.80	0.50 - 1.00	0.50 - 0.90	0.60 - 1.20
	Aluminum and Alloys	< 150	100 - 300	100 - 300	100 - 300	100 - 300	0.30 - 0.60	0.50 - 1.00	0.30 - 0.60	0.60 - 1.20	0.40 - 0.80	0.60 - 1.20

Formulas

1. **RPM = m/min • 3.82 • DIA**
   where:
   RPM = revolutions per minute (rev/min)
   m/min = speed (m/min)
   DIA = diameter of reamer (mm)

2. **mm/min = RPM • mm/rev**
   where:
   mm/min = mm per minute (mm/min)
   RPM = revolutions per minute (rev/min)
   mm/rev = feed rate (mm/rev)

3. **m/min = RPM • 0.003 • DIA**
   where:
   m/min = speed (m/min)
   RPM = revolutions per minute (rev/min)
   DIA = diameter of reamer (mm)

IMPORTANT: The speeds and feeds listed on these pages are a general starting point for all applications. Factory technical assistance is also available for specific applications through our Application Engineering department. *ext:* **7611** | *email:* **appeng@alliedmachine.com**

Stock Allowance and Coolant | Metric (mm)

Replaceable Head Style | 5000 Series

ISO	Material	Hardness (BHN)	Coolant	Recommended Stock (mm) by Reamer Diameter* 9.61 mm - 17.60 mm	17.61 mm - 26.60 mm	26.61 mm - 32.60 mm
P	**Free-Machining Steel**	100 - 180	Water Soluble / Cutting Oil	0.15 - 0.25	0.20 - 0.40	0.30 - 0.40
	1118, 1215, 12L14, etc.	180 - 250				
	Low-Carbon Steel	85 - 180				
	1010, 1020, 1025, 1522, 1144, etc.	180 - 275				
	Medium-Carbon Steel	125 - 180				
	1030, 1040, 1050, 1527, 1140, 1151, etc.	180 - 325				
	Alloy Steel	125 - 180				
	4140, 5140, 8640, etc.	180 - 375				
	High-Strength Alloy 4340, 4330V, 300M, etc.	240 - 450				
	Structural Steel	125 - 180				
	A36, A285, A516	180 - 350				
	Tool Steel	150 - 200				
	H-13, H-21, A-4, 0-2, S-3, etc.	200 - 250				
S	**High-Temp Alloy** Hastelloy B, Inconel 600, etc.	140 - 310	Water Soluble / Cutting Oil	0.15 - 0.25	0.20 - 0.40	0.30 - 0.40
	Titanium Alloy	140 - 310				
M	**Stainless Steel 400 Series** 416, 420, etc.	135 - 350	Water Soluble / Cutting Oil	0.15 - 0.25	0.20 - 0.40	0.30 - 0.40
	Stainless Steel 300 Series 304, 316, 17-4PH, etc.	135 - 275				
K	**Grey Cast Iron, Ductile Cast Iron,**	< 200	Water Soluble / Cutting Oil	0.15 - 0.25	0.20 - 0.40	0.30 - 0.40
	Spheroidal Cast Iron (Pearlitic)	> 200				
	Spheroidal Cast Iron (Ferritic)	260 - 320				
N	**Copper and Alloys Brass**	< 500	Water Soluble	0.15 - 0.25	0.20 - 0.40	0.30 - 0.40
	Bronze Bronze Phosphorous	< 180	Water Soluble / Cutting Oil			
	Aluminum and Alloys	< 150	Water Soluble / Cutting Oil			

*Stock value is on diameter.

IMPORTANT: The speeds and feeds listed on these pages are a general starting point for all applications. Factory technical assistance is also available for specific applications through our Application Engineering department. *ext:* **7611** | *email:* **appeng@alliedmachine.com**

Recommended Cutting Data | Metric (mm)

Monobloc Style

ISO	Material	Hardness (BHN)	Speed (m/min)			Recommended Feed (mm/rev) by Reamer Diameter					
						5.80 mm - 10.00 mm		10.01 mm - 22.00 mm		22.01 mm - 32.10 mm	
			Uncoated Carbide	Coated Carbide	Cermet	Lead A, G	Lead E, N, M	Lead A, G	Lead E, N, M	Lead A, G	Lead E, N, M
P	**Free-Machining Steel**	100 - 180	7 - 15	60 - 80	90 - 300	0.20 - 0.40	0.30 - 0.60	0.40 - 0.60	0.40 - 1.00	0.50 - 0.80	0.60 - 1.20
	1118, 1215, 12L14, etc.	180 - 250	6 - 10	40 - 70	80 - 200	0.20 - 0.40	0.30 - 0.50	0.30 - 0.60	0.30 - 0.80	0.40 - 0.70	0.40 - 1.00
	Low-Carbon Steel	85 - 180	7 - 15	60 - 80	90 - 300	0.20 - 0.40	0.30 - 0.60	0.40 - 0.60	0.40 - 1.00	0.50 - 0.80	0.60 - 1.20
	1010, 1020, 1025, 1522, 1144, etc.	180 - 275	6 - 10	40 - 70	80 - 200	0.20 - 0.40	0.30 - 0.50	0.30 - 0.60	0.30 - 0.80	0.40 - 0.70	0.40 - 1.00
	Medium-Carbon Steel	125 - 180	7 - 15	60 - 80	90 - 300	0.20 - 0.40	0.30 - 0.60	0.40 - 0.60	0.40 - 1.00	0.50 - 0.80	0.60 - 1.20
	1030, 1040, 1050, 1527, 1140, 1151, etc.	180 - 325	6 - 10	40 - 70	80 - 200	0.20 - 0.40	0.30 - 0.50	0.30 - 0.60	0.30 - 0.80	0.40 - 0.70	0.40 - 1.00
	Alloy Steel	125 - 180	6 - 10	40 - 70	80 - 200	0.20 - 0.40	0.30 - 0.60	0.40 - 0.60	0.40 - 1.00	0.50 - 0.80	0.60 - 1.20
	4140, 5140, 8640, etc.	180 - 375	4 - 8	30 - 50	60 - 150	0.20 - 0.40	0.30 - 0.50	0.30 - 0.60	0.30 - 0.80	0.40 - 0.70	0.40 - 1.00
	High-Strength Alloy 4340, 4330V, 300M, etc.	240 - 450	3 - 6	15 - 30	60 - 120	0.15 - 0.30	0.20 - 0.40	0.20 - 0.50	0.30 - 0.60	0.30 - 0.60	0.40 - 0.80
	Structural Steel	125 - 180	7 - 15	60 - 80	90 - 300	0.20 - 0.40	0.30 - 0.60	0.40 - 0.60	0.40 - 1.00	0.50 - 0.80	0.60 - 1.20
	A36, A285, A516	180 - 350	6 - 10	40 - 70	80 - 200	0.20 - 0.40	0.30 - 0.50	0.30 - 0.60	0.30 - 0.80	0.40 - 0.70	0.40 - 1.00
	Tool Steel	150 - 200	7 - 15	60 - 80	90 - 300	0.20 - 0.40	0.30 - 0.60	0.40 - 0.60	0.40 - 1.00	0.50 - 0.80	0.60 - 1.20
	H-13, H-21, A-4, 0-2, S-3, etc.	200 - 250	6 - 10	40 - 70	80 - 200	0.20 - 0.40	0.30 - 0.50	0.30 - 0.60	0.30 - 0.80	0.40 - 0.70	0.40 - 1.00
S	**High-Temp Alloy** Hastelloy B, Inconel 600, etc.	140 - 310	4 - 10	30 - 50	–	0.15 - 0.30	–	0.20 - 0.40	–	0.30 - 0.50	–
	Titanium Alloy	140 - 310	4 - 15	30 - 50	–	0.15 - 0.30	–	0.20 - 0.40	–	0.30 - 0.50	–
M	**Stainless Steel 400 Series** 416, 420, etc.	135 - 350	4 - 10	30 - 50	60 - 150	0.20 - 0.40	0.30 - 0.50	0.30 - 0.60	0.30 - 0.80	0.40 - 0.70	0.40 - 1.00
	Stainless Steel 300 Series 304, 316, 17-4PH, etc.	135 - 275	4 - 10	30 - 50	60 - 150	0.20 - 0.40	0.30 - 0.50	0.30 - 0.60	0.30 - 0.80	0.40 - 0.70	0.40 - 1.00
K	**Grey Cast Iron, Ductile Cast Iron,**	< 200	15 - 30	50 - 70	–	0.20 - 0.40	0.30 - 0.60	0.35 - 0.60	0.50 - 0.80	0.40 - 1.00	0.60 - 1.50
	Spheroidal Cast Iron (Pearlitic)	> 200	10 - 20	50 - 70	–	0.20 - 0.40	0.30 - 0.60	0.35 - 0.60	0.50 - 0.80	0.40 - 1.00	0.60 - 1.50
	Spheroidal Cast Iron (Ferritic)	260 - 320	8 - 12	30 - 50	60 - 120	0.20 - 0.40	0.30 - 0.60	0.35 - 0.60	0.50 - 0.80	0.40 - 1.00	0.60 - 1.50
N	**Copper and Alloys Brass**	< 500	10 - 18	100 - 200	–	0.20 - 0.40	–	0.40 - 0.70	–	0.50 - 0.80	–
	Bronze Bronze Phosphorous	< 180	10 - 20	80 - 160	100 - 300	0.15 - 0.30	–	0.20 - 0.40	–	0.30 - 0.60	–
	Aluminum and Alloys	< 150	15 - 30	100 - 200	–	0.20 - 0.40	–	0.40 - 0.70	–	0.50 - 0.80	–

Formulas

1. **RPM = m/min • 3.82 • DIA**
   where:
   RPM = revolutions per minute (rev/min)
   m/min = speed (m/min)
   DIA = diameter of reamer (mm)

2. **mm/min = RPM • mm/rev**
   where:
   mm/min = mm per minute (mm/min)
   RPM = revolutions per minute (rev/min)
   mm/rev = feed rate (mm/rev)

3. **m/min = RPM • 0.003 • DIA**
   where:
   m/min = speed (m/min)
   RPM = revolutions per minute (rev/min)
   DIA = diameter of reamer (mm)

IMPORTANT: The speeds and feeds listed on these pages are a general starting point for all applications. Factory technical assistance is also available for specific applications through our Application Engineering department. *ext:* **7611** | *email:* **appeng@alliedmachine.com**

Stock Allowance and Coolant | Metric (mm)

Monobloc Style

ISO	Material	Hardness (BHN)	Coolant	Recommended Stock (mm) by Reamer Diameter* 5.80 mm - 10.00 mm	10.01 mm - 22.00 mm	22.01 mm - 32.10 mm
P	**Free-Machining Steel**	100 - 180	Water Soluble / Cutting Oil	0.08 - 0.15	0.15 - 0.25	0.15 - 0.30
	1118, 1215, 12L14, etc.	180 - 250				
	Low-Carbon Steel	85 - 180				
	1010, 1020, 1025, 1522, 1144, etc.	180 - 275				
	Medium-Carbon Steel	125 - 180				
	1030, 1040, 1050, 1527, 1140, 1151, etc.	180 - 325				
	Alloy Steel	125 - 180				
	4140, 5140, 8640, etc.	180 - 375				
	High-Strength Alloy 4340, 4330V, 300M, etc.	240 - 450				
	Structural Steel	125 - 180				
	A36, A285, A516	180 - 350				
	Tool Steel	150 - 200				
	H-13, H-21, A-4, 0-2, S-3, etc.	200 - 250				
S	**High-Temp Alloy** Hastelloy B, Inconel 600, etc.	140 - 310	Water Soluble / Cutting Oil	0.10 - 0.20	0.15 - 0.25	0.20 - 0.40
	Titanium Alloy	140 - 310				
M	**Stainless Steel 400 Series** 416, 420, etc.	135 - 350	Water Soluble / Cutting Oil	0.08 - 0.15	0.15 - 0.25	0.15 - 0.30
	Stainless Steel 300 Series 304, 316, 17-4PH, etc.	135 - 275				
K	**Grey Cast Iron, Ductile Cast Iron,**	< 200	Water Soluble / Cutting Oil	0.08 - 0.15	0.15 - 0.25	0.15 - 0.30
	Spheroidal Cast Iron (Pearlitic)	> 200				
	Spheroidal Cast Iron (Ferritic)	260 - 320				
N	**Copper and Alloys Brass**	< 500	Water Soluble	0.08 - 0.15	0.15 - 0.25	0.15 - 0.30
	Bronze Bronze Phosphorous	< 180	Water Soluble / Cutting Oil			
	Aluminum and Alloys	< 150	Water Soluble / Cutting Oil			

*Stock value is on diameter.

IMPORTANT: The speeds and feeds listed on these pages are a general starting point for all applications. Factory technical assistance is also available for specific applications through our Application Engineering department. *ext:* **7611** | *email:* **appeng@alliedmachine.com**

Recommended Cutting Data | Metric (mm)

Cutting Ring Style

ISO	Material	Hardness (BHN)	Speed (m/min)			Recommended Feed (mm/rev) by Reamer Diameter					
						17.60 mm - 40.00 mm		40.01 mm - 80.00 mm		80.01 mm - 200.00 mm	
			Uncoated Carbide	Coated Carbide	Cermet	Lead A, G	Lead E, N, M	Lead A, G	Lead E, N, M	Lead A, G	Lead E, N, M
P	**Free-Machining Steel**	100 - 180	7 - 15	60 - 80	90 - 300	0.50 - 0.80	0.60 - 1.20	0.50 - 1.00	0.80 - 1.60	0.80 - 1.50	1.00 - 2.20
	1118, 1215, 12L14, etc.	180 - 250	6 - 10	40 - 70	80 - 200	0.40 - 0.70	0.40 - 1.00	0.50 - 0.80	0.60 - 1.40	0.80 - 1.20	1.00 - 2.00
	Low-Carbon Steel	85 - 180	7 - 15	60 - 80	90 - 300	0.50 - 0.80	0.60 - 1.20	0.50 - 1.00	0.80 - 1.60	0.80 - 1.50	1.00 - 2.20
	1010, 1020, 1025, 1522, 1144, etc.	180 - 275	6 - 10	40 - 70	80 - 200	0.40 - 0.70	0.40 - 1.00	0.50 - 0.80	0.60 - 1.40	0.80 - 1.20	1.00 - 2.00
	Medium-Carbon Steel	125 - 180	7 - 15	60 - 80	90 - 300	0.50 - 0.80	0.60 - 1.20	0.50 - 1.00	0.80 - 1.60	0.80 - 1.50	1.00 - 2.20
	1030, 1040, 1050, 1527, 1140, 1151, etc.	180 - 325	6 - 10	40 - 70	80 - 200	0.40 - 0.70	0.40 - 1.00	0.50 - 0.80	0.60 - 1.40	0.80 - 1.20	1.00 - 2.00
	Alloy Steel	125 - 180	6 - 10	40 - 70	80 - 200	0.50 - 0.80	0.60 - 1.20	0.50 - 1.00	0.80 - 1.60	0.80 - 1.50	1.00 - 2.20
	4140, 5140, 8640, etc.	180 - 375	4 - 8	30 - 50	60 - 150	0.40 - 0.70	0.40 - 1.00	0.50 - 0.80	0.60 - 1.40	0.80 - 1.20	1.00 - 2.00
	High-Strength Alloy 4340, 4330V, 300M, etc.	240 - 450	3 - 6	15 - 30	60 - 120	0.30 - 0.60	0.40 - 0.80	0.40 - 0.80	0.50 - 1.00	0.60 - 1.00	0.70 - 1.40
	Structural Steel	125 - 180	7 - 15	60 - 80	90 - 300	0.50 - 0.80	0.60 - 1.20	0.50 - 1.00	0.80 - 1.60	0.80 - 1.50	1.00 - 2.20
	A36, A285, A516	180 - 350	6 - 10	40 - 70	80 - 200	0.40 - 0.70	0.40 - 1.00	0.50 - 0.80	0.60 - 1.40	0.80 - 1.20	1.00 - 2.00
	Tool Steel	150 - 200	7 - 15	60 - 80	90 - 300	0.50 - 0.80	0.60 - 1.20	0.50 - 1.00	0.80 - 1.60	0.80 - 1.50	1.00 - 2.20
	H-13, H-21, A-4, 0-2, S-3, etc.	200 - 250	6 - 10	40 - 70	80 - 200	0.40 - 0.70	0.40 - 1.00	0.50 - 0.80	0.60 - 1.40	0.80 - 1.20	1.00 - 2.00
S	**High-Temp Alloy** Hastelloy B, Inconel 600, etc.	140 - 310	4 - 8	30 - 50	–	0.30 - 0.50	–	0.40 - 0.60	–	0.50 - 0.70	–
	Titanium Alloy	140 - 310	4 - 8	30 - 50	–	0.30 - 0.50	–	0.40 - 0.60	–	0.50 - 0.70	–
M	**Stainless Steel 400 Series** 416, 420, etc.	135 - 350	4 - 8	30 - 50	60 - 150	0.40 - 0.70	0.40 - 1.00	0.50 - 0.80	0.60 - 1.40	0.80 - 1.20	1.00 - 2.00
	Stainless Steel 300 Series 304, 316, 17-4PH, etc.	135 - 275	4 - 8	30 - 50	60 - 150	0.40 - 0.70	0.40 - 1.00	0.50 - 0.80	0.60 - 1.40	0.80 - 1.20	1.00 - 2.00
K	**Grey Cast Iron, Ductile Cast Iron,**	< 200	15 - 30	50 - 70	–	0.40 - 1.00	0.60 - 1.50	0.60 - 1.30	0.80 - 1.60	0.80 - 1.70	1.00 - 2.25
	Spheroidal Cast Iron (Pearlitic)	> 200	10 - 20	50 - 70	–	0.40 - 1.00	0.60 - 1.50	0.60 - 1.30	0.80 - 1.60	0.80 - 1.70	1.00 - 2.25
	Spheroidal Cast Iron (Ferritic)	260 - 320	8 - 12	30 - 50	60 - 120	0.40 - 1.00	0.60 - 1.50	0.60 - 1.30	0.80 - 1.60	0.80 - 1.70	1.00 - 2.25
N	**Copper and Alloys Brass**	< 500	10 - 18	100 - 200	–	0.50 - 0.80	–	0.60 - 1.00	–	0.80 - 1.40	–
	Bronze Bronze Phosphorous	< 180	10 - 20	80 - 160	100 - 300	0.30 - 0.60	–	0.40 - 0.80	–	0.60 - 1.00	–
	Aluminum and Alloys	< 150	15 - 30	100 - 200	–	0.50 - 0.80	–	0.60 - 1.00	–	0.80 - 1.40	–

Formulas

1. **RPM = m/min • 3.82 • DIA**
   where:
   RPM = revolutions per minute (rev/min)
   m/min = speed (m/min)
   DIA = diameter of reamer (mm)

2. **mm/min = RPM • mm/rev**
   where:
   mm/min = mm per minute (mm/min)
   RPM = revolutions per minute (rev/min)
   mm/rev = feed rate (mm/rev)

3. **m/min = RPM • 0.003 • DIA**
   where:
   m/min = speed (m/min)
   RPM = revolutions per minute (rev/min)
   DIA = diameter of reamer (mm)

IMPORTANT: The speeds and feeds listed on these pages are a general starting point for all applications. Factory technical assistance is also available for specific applications through our Application Engineering department. *ext:* **7611** | *email:* **appeng@alliedmachine.com**

Stock Allowance and Coolant | Metric (mm)

Cutting Ring Style

ISO	Material	Hardness (BHN)	Coolant	Recommended Stock (mm) by Reamer Diameter* 17.60 mm - 40.00 mm	40.01 mm - 80.00 mm	80.01 mm - 200.00 mm
P	**Free-Machining Steel**	100 - 180	Water Soluble / Cutting Oil	0.15 - 0.30	0.20 - 0.40	0.25 - 0.50
	1118, 1215, 12L14, etc.	180 - 250				
	Low-Carbon Steel	85 - 180				
	1010, 1020, 1025, 1522, 1144, etc.	180 - 275				
	Medium-Carbon Steel	125 - 180				
	1030, 1040, 1050, 1527, 1140, 1151, etc.	180 - 325				
	Alloy Steel	125 - 180				
	4140, 5140, 8640, etc.	180 - 375				
	High-Strength Alloy 4340, 4330V, 300M, etc.	240 - 450				
	Structural Steel	125 - 180				
	A36, A285, A516	180 - 350				
	Tool Steel	150 - 200				
	H-13, H-21, A-4, 0-2, S-3, etc.	200 - 250				
S	**High-Temp Alloy** Hastelloy B, Inconel 600, etc.	140 - 310	Water Soluble / Cutting Oil	0.20 - 0.40	0.30 - 0.40	0.30 - 0.50
	Titanium Alloy	140 - 310				
M	**Stainless Steel 400 Series** 416, 420, etc.	135 - 350	Water Soluble / Cutting Oil	0.15 - 0.30	0.20 - 0.40	0.25 - 0.50
	Stainless Steel 300 Series 304, 316, 17-4PH, etc.	135 - 275				
K	**Grey Cast Iron, Ductile Cast Iron,**	< 200	Water Soluble / Cutting Oil	0.15 - 0.30	0.20 - 0.40	0.25 - 0.50
	Spheroidal Cast Iron (Pearlitic)	> 200				
	Spheroidal Cast Iron (Ferritic)	260 - 320				
N	**Copper and Alloys Brass**	< 500	Water Soluble	0.15 - 0.30	0.20 - 0.40	0.25 - 0.50
	Bronze Bronze Phosphorous	< 180	Water Soluble / Cutting Oil			
	Aluminum and Alloys	< 150	Water Soluble / Cutting Oil			

*Stock value is on diameter.

IMPORTANT: The speeds and feeds listed on these pages are a general starting point for all applications. Factory technical assistance is also available for specific applications through our Application Engineering department. *ext:* **7611** | *email:* **appeng@alliedmachine.com**

Setup Information

Replaceable Head Style | 7000 Series

Fixed Head Style

Tolerance: Fixed reamers are manufactured at 2/3 of the tolerance.

Recommended Tightening Torque

Imperial		Metric	
D_1 Range (inch)	Torque (in-lbs)	D_1 Range (mm)	Torque (N-m)
0.4646 - 0.5751	22.13	11.800 - 14.609	2.5
0.5752 - 0.6932	30.98	14.610 - 17.609	3.5
0.6933 - 0.8507	44.25	17.610 - 21.609	5.0
0.8508 - 1.0475	61.96	21.610 - 26.609	7.0
1.0476 - 1.2838	88.51	26.610 - 32.609	10.0
1.2839 - 1.5987	106.21	32.610 - 40.609	12.0
1.5988 - 1.9924	141.61	40.610 - 50.609	16.0
1.9925 - 2.3862	177.01	50.610 - 60.609	20.0

Expandable Head Style

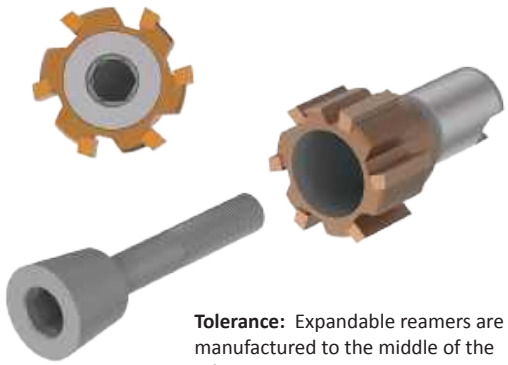

Tolerance: Expandable reamers are manufactured to the middle of the tolerance.

Expanding Heads Adjustment

When the size reaches its lower tolerance, the head can be adjusted to compensate for wear to the cutting edges. This operation can be repeated several times until the surface finish of the hole deteriorates to an unacceptable level.

Adjustment Procedure

Slowly turn the right-hand threaded screw clockwise while checking the diameter setting of the reamer with a micrometer. When the required diameter is achieved, the tool is ready for use.

Replaceable Head Reamer 7000 Series Assembly

Fixed and Expandable Styles

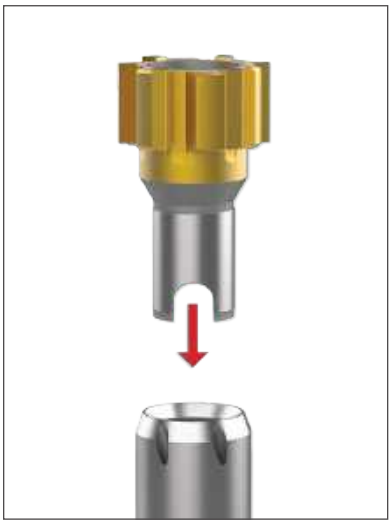

Step 1:
Insert the replaceable reamer head into the mandrel.

Step 2:
Insert the screw into the reamer head opening to secure it to the mandrel.

Step 3:
Tighten the screw.

NOTE: We recommend lubricating the thread and the conical surface of contact between the reamer head and the screw with antifriction MOLYKOTE® grease.

Setup Information

Replaceable Head Style | 9000 Series

Fixed Head Style

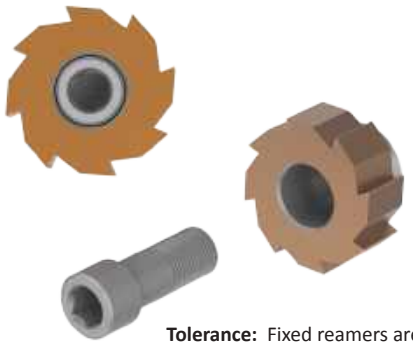

Tolerance: Fixed reamers are manufactured at 2/3 of the tolerance.

Recommended Tightening Torque

Imperial		Metric	
D_1 Range (inch)	Torque (in-lbs)	D_1 Range (mm)	Torque (N-m)
0.4646 - 0.5751	22.13	11.800 - 14.609	2.5
0.5752 - 0.6932	30.98	14.610 - 17.609	3.5
0.6933 - 0.8507	39.83	17.610 - 21.609	4.5
0.8508 - 1.0475	53.10	21.610 - 26.609	6.0
1.0476 - 1.2838	88.51	26.610 - 32.609	10.0
1.2839 - 1.5984	106.21	32.610 - 40.600	12.0

Replaceable Head Reamer 9000 Series Assembly

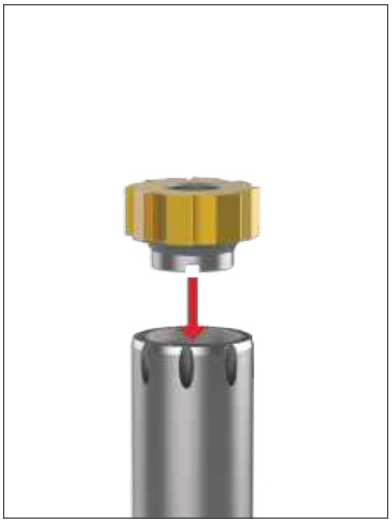

Step 1:
Carefully clean the connecting surfaces and insert the replaceable reamer head into the mandrel.

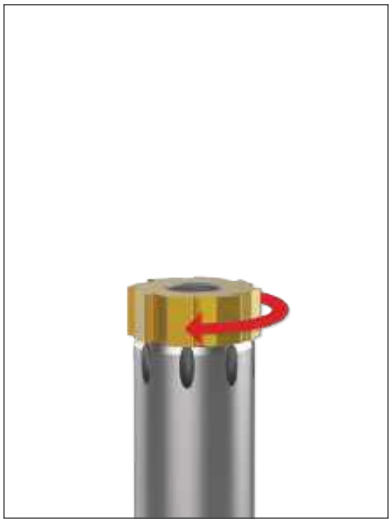

Step 2:
Screw the head in by hand clockwise until it makes contact the mandrel.

Step 3:
Tighten the screw according to the predetermined value in the table.

NOTE: We recommend lubricating the thread of the screw with antifriction MOLYKOTE® grease.

Setup Information

Replaceable Head Style | 5000 Series

Expandable Head Style

Tolerance: Expandable reamers are manufactured to the middle of the tolerance.

Expanding Heads Adjustment

When the size reaches its lower tolerance, the head can be adjusted to compensate for wear to the cutting edges. This operation can be repeated several times until the surface finish of the hole deteriorates to an unacceptable level.

Replaceable Head Reamer 5000 Series Assembly

Step 1:
Carefully clean the connecting surfaces and insert the replaceable reamer head into the mandrel. Screw it in by hand clockwise.

Step 2:
Tighten the replaceable head down with a wrench until the flat surface of the head is in complete contact with the mandrel.

Step 3:
Compensate for wear by adjusting the front expansion screw while using a wrench to keep the head still.

Setup Information

Monobloc Style

Tolerance

All monobloc reamers are ground to the requested diameter and set in the middle of the hole tolerance ready for use.

Adjustment

The adjustment must be made to compensate for wear to the cutting edges when the size reaches its lower tolerance. This operation can be repeated several times until the surface finish of the hole deteriorates to an unacceptable level. Then the reamer must be reground. The maximum expansion is about 1% of the diameter.

Setup Information

Cutting Ring Style

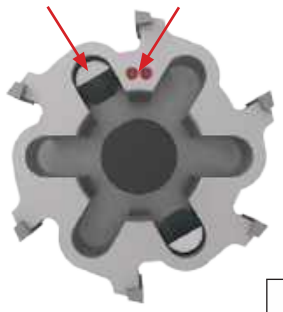

Step 1:
With the drive pins assembled, insert the cutting ring onto the mandrel. Make sure the dimples are at the 12:00 position with the drive pin at the 11:00 position.

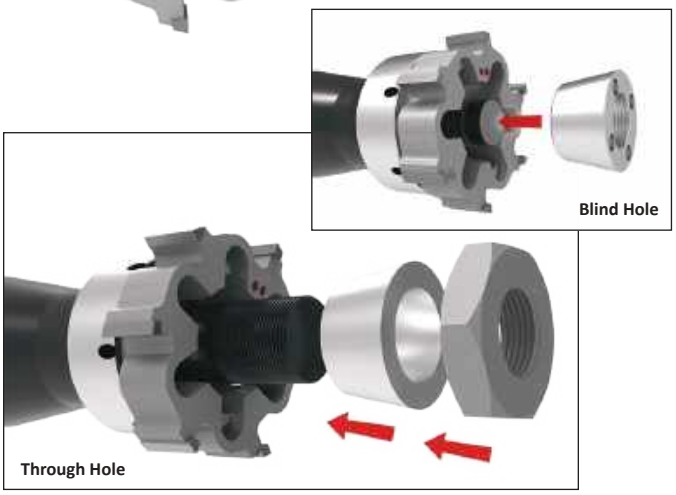

Step 2:

Insert the conical ring. Tighten the lock nut to set the desired reamer size (left-hand thread). Then loosen the lock nut slightly until it "clicks" against the drive wall.

NOTE: We recommend lubricating the thread and the conical surface of contact between the cutting ring and the conical ring with antifriction MOLYKOTE® grease.

Adjustment Procedure

1. Turn the conical ring slowly using an adjustment key (left-hand thread). Adjustment keys are supplied with reamers from diameter 17.600 mm to 40.599 mm.
2. Check the diameter setting of the cutting ring with a micrometer.
3. When the required diameter is achieved, unscrew the conical ring until there is a click and the drive pins are in traction in the opposite direction to the cutting action of the reamer. The reamer is ready for use.

For Diameter Range: 100.600 mm - 200.600 mm

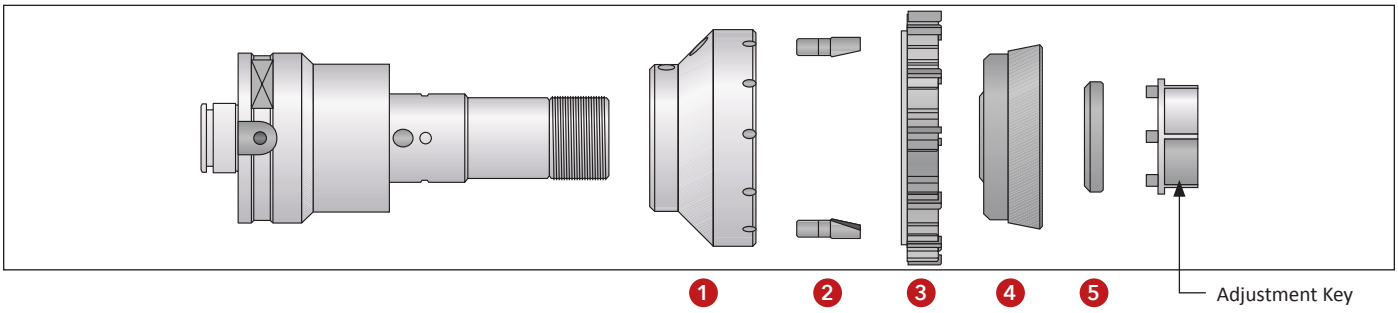

Assembly

1. With the drive pins (2) assembled, mount the flange (1) onto the mandrel. Assemble the cutting ring (3) so the slot on the left side of the dimple is mounted onto the drive pins (2). Insert the conical ring (4).
2. Screw the ring nut (5) onto the mandrel and tighten manually so the conical ring (4) makes contact with the cutting ring (3). The thread is left handed.

   NOTE: We recommend lubricating the thread and the conical surface of contact between the cutting ring and the conical ring with antifriction MOLYKOTE® grease.

Adjustment Procedure

1. Turn the ring nut (5) slowly using a pin spanner.
2. Check the diameter setting of the cutting ring with a micrometer. Make sure the drive pins (2) are in traction and in the opposite direction of the cutting action of the reamer.
3. When the required diameter is achieved, the tool is ready to use.

Diameter Measurement

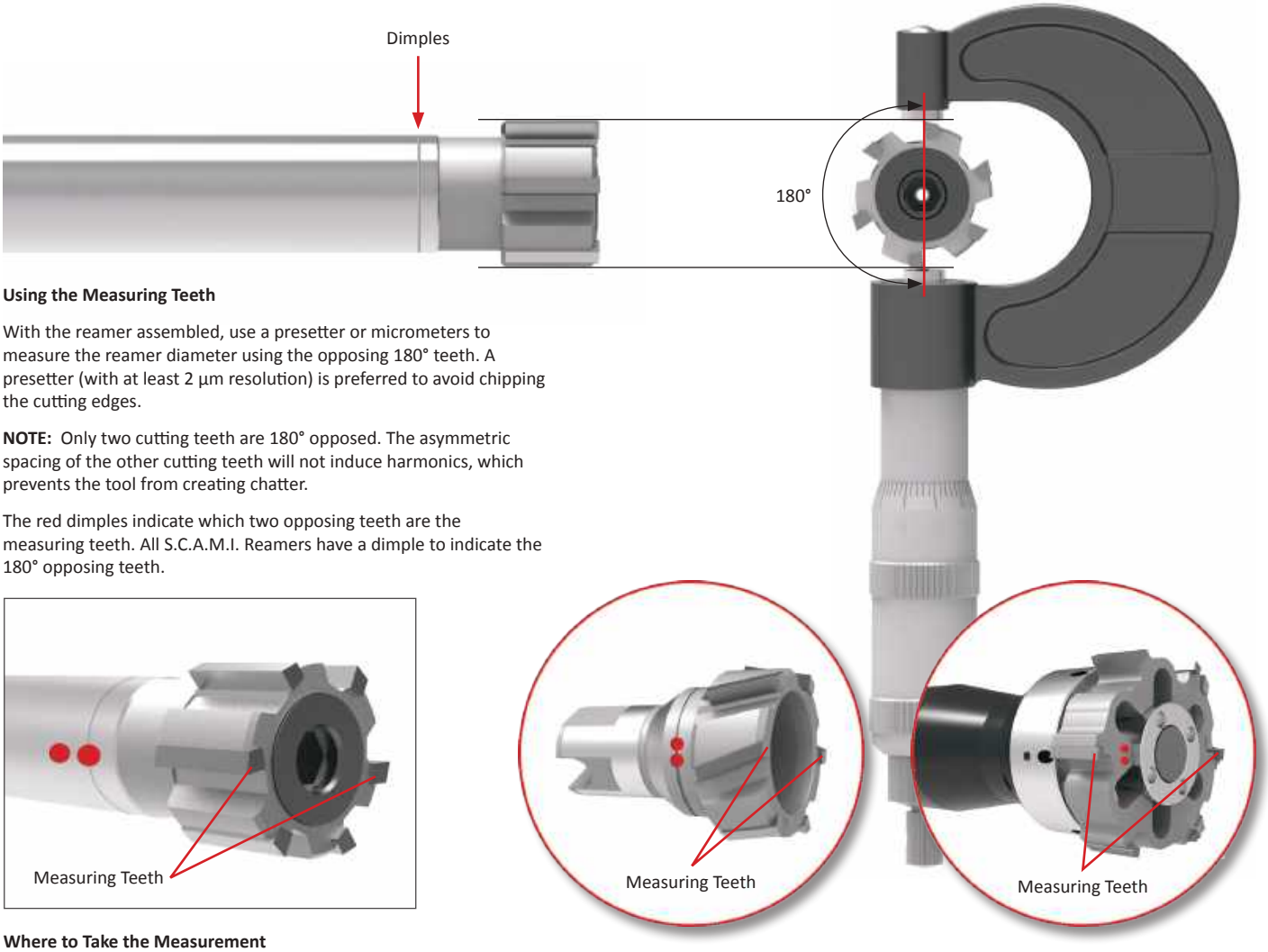

Using the Measuring Teeth

With the reamer assembled, use a presetter or micrometers to measure the reamer diameter using the opposing 180° teeth. A presetter (with at least 2 µm resolution) is preferred to avoid chipping the cutting edges.

NOTE: Only two cutting teeth are 180° opposed. The asymmetric spacing of the other cutting teeth will not induce harmonics, which prevents the tool from creating chatter.

The red dimples indicate which two opposing teeth are the measuring teeth. All S.C.A.M.I. Reamers have a dimple to indicate the 180° opposing teeth.

Where to Take the Measurement

When measuring the diameter, take the measurement from the area of the cutting tooth just below the transition from the lead angle to the OD edge. See the illustration below.

The back side of the OD edge has a back taper. This is why measuring from the location just below the lead angle/OD edge transition point results in the most accurate measurement (before the taper begins).

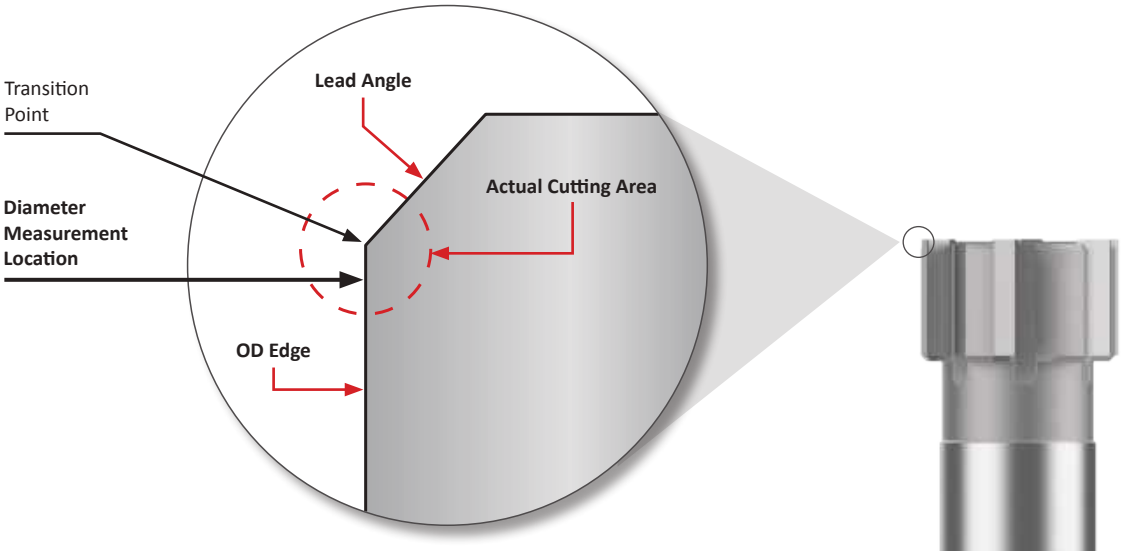

TIR Measurement

What is TIR?

Total indicator runout (TIR) refers to the distance to which the reamer is cutting off-center. In an ideal situation, the tool would begin in the exact center of the hole, and it would then rotate and cut in a perfect circle. This would result in a TIR of 0.

Because a perfect TIR of 0 is not practical, the goal is to maintain a TIR as close to 0 as possible. The closer the TIR is to 0, the better the reamer will perform.

Allied Machine recommends a TIR of < 0.0005" (0.013 mm).

Think of attempting to draw a perfect circle with a drafting compass, but the pencil runs slightly outside the point where the circle began because the center point shifted during the pencil's path. This slight area of overlap would be the TIR.

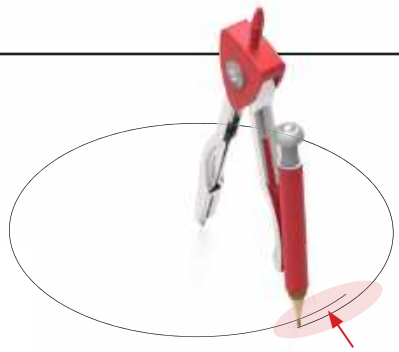

TIR: How far from center the tool will move during its path.

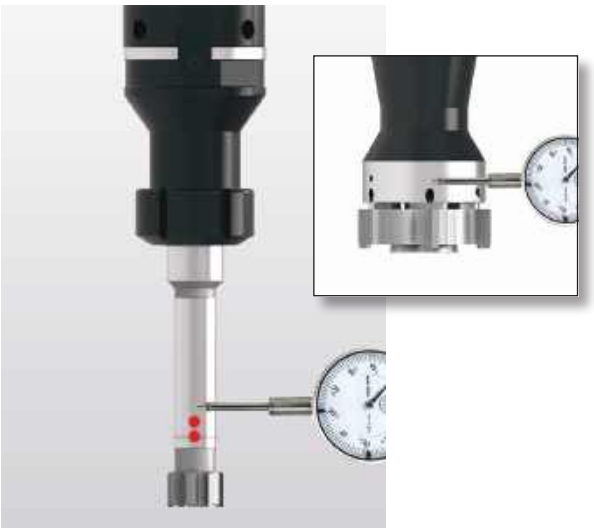

Step 1:

Check the TIR first on the mandrel (or ground) area of the reamer. Center the indicator in line with the dimple.

Measure the TIR by rotating the tool until the indicator reaches the highest value.

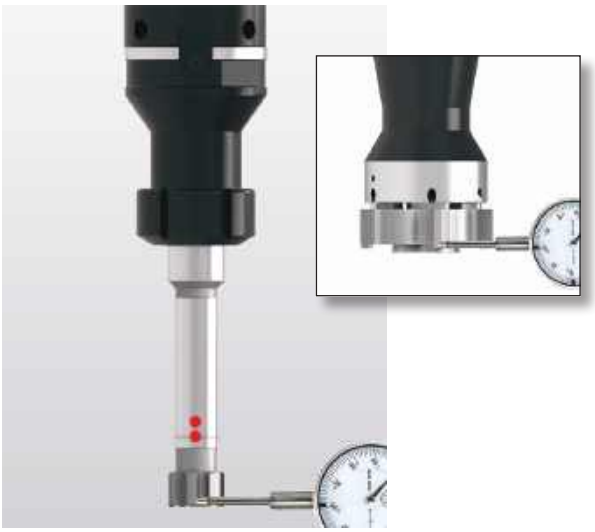

Step 2:

Next, check the TIR on the cutting teeth of the reamer.

NOTE: Rotate the tool counterclockwise to avoid chipping the cutting teeth with the indicator.

TIR Adjustment

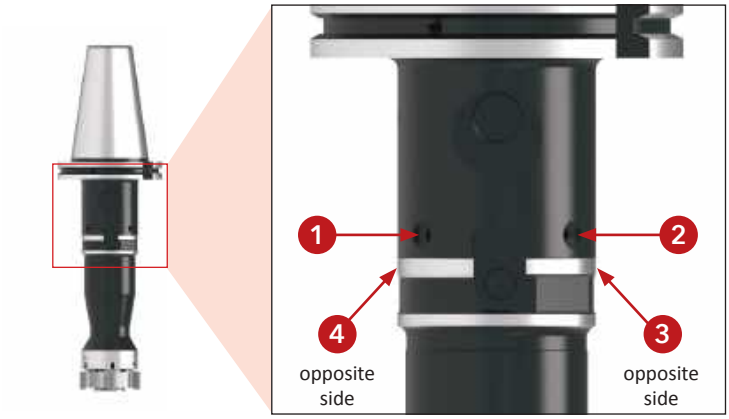

Step 1:

Place the tool into the machine spindle. Make contact with the four radial adjustment screws in a concentric fashion (this results in equal pressure surrounding the tool).

Tighten #1, then #3, followed by #2 and #4.

Step 2:

Swipe the dial indicator around the ground portion of the arbor near the coolant outlet holes to verify the TIR.

The TIR should be within 0.0005" (as close to 0 as possible). This will ensure the TIR check on the cutting teeth will be more true. It also means the arbor is running true to the shank.

Step 3:

Once the TIR is checked on the arbor, check the TIR on the cutting teeth. Rotate the tool counterclockwise to avoid chipping the cutting teeth.

Step 4:

Tighten down the central clamping screws. During the tightening, the tool body will shift slightly. Repeat the TIR check on the cutting teeth and adjust as necessary.

Troubleshooting Guide

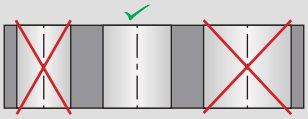

Oversized Hole

- Reamer is running eccentric to the center of the machine spindle. ▶ Use modular system with radial adjustment.
- Excessive misalignment causing reamer to cut on back taper. ▶ Fix the misalignment.
- Material buildup on cutting edges. ▶ Replace the coolant or change the cutting speed.
- Reamer diameter is too large. ▶ Use smaller reamer or regrind existing reamer.

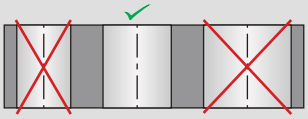

Undersized Hole

- The reamer diameter is too small. ▶ Use larger reamer.
- The reamer diameter is worn. ▶ Expand, regrind, or replace the reamer.
- The coolant is not suitable. ▶ Replace the coolant.
- Stock allowance is too small. ▶ Increase the stock allowance.
- The cutting speed is too low. ▶ Increase the cutting speed.

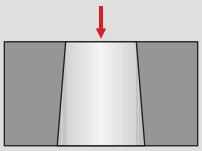

Tapered Hole

- Excessive misalignment. ▶ Correct the misalignment.

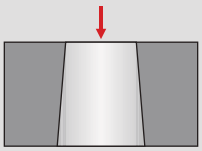

Burr at Hole Entry

- Excessive misalignment. ▶ Correct the misalignment.

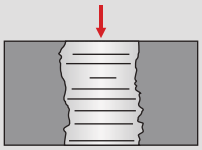

Hole is Not Straight

- Concentricity and alignment error between the workpiece and the tool. ▶ Correct the misalignment and use the modular system with radial adjustment.
- Asymmetrical cutting or angled surfaces. ▶ Create a chamfer on the lead-in.

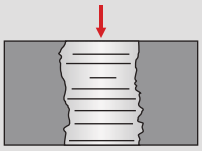

Poor Hole Finish

- One cutting edge is chipped. ▶ Regrind the reamer.
- The lead-in is irregular. ▶ Regrind the reamer.
- Back taper on the cutting edge is too great. ▶ Regrind the reamer.
- Excessive misalignment. ▶ Correct the misalignment or use the modular system.
- Cutting data is not correct. ▶ Verify the cutting data.
- Poor chip evacuation. ▶ Verify the coolant volume and pressure or use through-tool coolant.

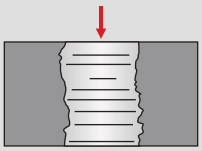

Reamer Creates Excessive Torque Loading

- Back taper on the cutting edge is too small. ▶ Regrind the reamer.
- The radially ground land is too wide. ▶ Regrind the reamer.
- The coolant is not suitable. ▶ Replace the coolant.

Notes

Guaranteed Test / Demo Application Form

Distributor PO #	

The following must be filled out completely before your test will be considered.

IMPORTANT: For processing, send purchase order to your Allied Field Sales Engineer (FSE). Please clearly mark the paperwork as "Test Order."

Distributor Information

Company Name: _____

Contact: _____

Account Number: _____

Phone: _____

Email: _____

End User Information

Company Name: _____

Contact: _____

Industry: _____

Phone: _____

Email: _____

Current Process

List all tooling, coatings, substrates, speeds and feeds, tool life, and any problems you are experiencing.

_____

_____

Test Objective

List what would make this a successful test (i.e. penetration rate, finish, tool life, hole size, etc.).

_____

_____

Application Information

Hole Diameter: _____ in/mm

Tolerance: _____

Material: _____ (4150, A36, cast iron, etc.)

Preexisting Diameter: _____ in/mm

Depth of Cut: _____ in/mm

Hardness: _____ (BHN, Rc)

Required Finish: _____ RMS

State: _____ (Casting, hot rolled, forging)

Machine Information

Machine Type: _____ (Lathe, screw machine, machine center, etc.)

Builder: _____ (Haas, Mori Seiki, etc.)

Model #: _____

Shank Required: _____ (CAT50, Morse taper, etc.)

Power: _____ HP/KW

Thrust: _____ lbs/N

Rigidity:
- ☐ Excellent
- ☐ Good
- ☐ Poor

Orientation:
- ☐ Vertical
- ☐ Horizontal

Tool Rotating:
- ☐ Yes
- ☐ No

Coolant Information

Coolant Delivery: _____ (Through tool, flood)

Coolant Pressure: _____ PSI / bar

Coolant Type: _____ (Air mist, oil, synthetic, water soluble, etc.)

Coolant Volume: _____ GPM / LPM

Requested Tooling

QTY	Item Number

QTY	Item Number

ALLIED MACHINE & ENGINEERING

Allied Machine & Engineering
120 Deeds Drive
Dover, OH 44622

Telephone: (330) 343-4283
Toll Free USA & Canada: (800) 321-5537
Email: info@alliedmachine.com

ALLIED MACHINE & ENGINEERING

Warranty Information

Allied Machine & Engineering ("Allied Machine") warrants to original equipment manufacturers, distributors, industrial and commercial users of its products for one year from the original date of sale that each new product manufactured or supplied by Allied Machine shall be free from defects in material and workmanship.

Allied Machine's sole and exclusive obligation under this warranty is limited to, at its option, without additional charge, replacing or repairing this product or issuing a credit. For this warranty to be applied, the product must be returned freight prepaid to the plant designated by an Allied Machine representative and which, upon inspection, is determined by Allied Machine to be defective in material and workmanship.

Complete information as to operating conditions, machine, setup, and the application of cutting fluid should accompany any product returned for inspection. This warranty shall not apply to any Allied Machine products which have been subjected to misuse, abuse, improper operating conditions, improper machine setup or improper application of cutting fluid or which have been repaired or altered if such repair or alteration, in the judgement of Allied Machine, would adversely affect the performance of the product.

THIS WARRANTY IS IN LIEU OF ALL OTHER WARRANTIES, EXPRESS OR IMPLIED, INCLUDING ANY IMPLIED WARRANTY OF MERCHANTABILITY OR FITNESS FOR A PARTICULAR PURPOSE. Allied Machine shall have no liability or responsibility for any claim, whether in contract, tort or otherwise, for any loss or damage arising out of, connected with, or resulting from the manufacture, sale, delivery or use of any product sold hereunder, in excess of the cost of replacement or repair as provided herein.

Allied Machine shall not be liable in contract or in tort (including, without limitation, negligence, strict liability or otherwise) for economic losses of any kind or for any special, incidental, indirect, consequential, punitive or exemplary damages arising in any way out of the performance of, or failure to perform this agreement.

ALL PRICES, DELIVERIES, DESIGNS, AND MATERIALS ARE SUBJECT TO CHANGE WITHOUT NOTICE.

Allied Machine & Engineering is registered to ISO 9001:2015 by DQS.

Wohlhaupter GmbH is registered to ISO 9001:2015 by QUACERT.

Allied Machine & Engineering Co. Europe Ltd. is registered to ISO 9001:2015 by bsi.

United States

Allied Machine & Engineering
120 Deeds Drive
Dover OH 44622
United States

Phone:
+1.330.343.4283

Toll Free USA and Canada:
800.321.5537

Toll Free USA and Canada:
800.223.5140

Allied Machine & Engineering
485 W Third Street
Dover OH 44622
United States

Phone:
+1.330.343.4283

Toll Free USA and Canada:
800.321.5537

Europe

Allied Machine & Engineering Co. (Europe) Ltd
93 Vantage Point
Pensnett Estate
Kingswinford
West Midlands
DY6 7FR England

Phone:
+44 (0) 1384 400 900

Wohlhaupter® GmbH
Maybachstrasse 4
Postfach 1264
72636 Frickenhausen
Germany

Phone:
+49 (0) 7022 408-0

Asia

Wohlhaupter® India Pvt. Ltd.
B-23, 3rd Floor
B Block Community Centre
Janakpuri, New Delhi - 110058
India

Phone:
+91 (0) 11.41827044

Your local Allied Machine representative:

www.alliedmachine.com

Allied Machine & Engineering is registered to **ISO 9001:2015** by DQS.
Wohlhaupter GmbH is registered to **ISO 9001:2015** by QUACERT.
Allied Machine & Engineering Co. (Europe) Ltd is registered to **ISO 9001:2015** by bsi.

ALLIED MACHINE & ENGINEERING

Copyright © 2025 Allied Machine and Engineering Corp. – All rights reserved.
All trademarks designated with the ® symbol are registered in the United States and other countries.
Available Online Only: AMPC-C
Publish Date: May 2025